MB FRIGO

REFRIGERATION UNITS

CHILLING
YOUR WORLD
SINCE 1981

ARCTIC
ARCTICO2

MB FRIGO GRUPA

From idea to realization with our expert team.

TOP QUALITY

Our products are of the highest quality – from the individual components to the finished product.

EXPERTISE

We improve our know-how and skills on a daily basis, positively impacting every business and production segment.

INVESTING IN THE FUTURE

Our products are continuously optimized to achieve the best possible energy efficiency. Our clients want to invest in the future and are already thinking about how they can reduce future maintenance costs.

ENGINEERING-INSTALLER APPROACH

We combine an innovative engineering approach with installation experience and technical support.

ADAPTABILITY

We design, construct and manufacture refrigeration equipment according to customer requirements.

By offering quality and recognizable products, innovative solutions and excellent service, we want to improve the quality of life and achieve business success of each user of our products and services.

MB FRIGO GROUP

PRODUCTION OF REFRIGERATION EQUIPMENT

Years of Experience
For more than 40 years, we have been developing and improving our own in-house range of refrigeration products and equipment, which we deliver all across the globe. While we started out as a small family business, today we have a team of over 180 employees. Together with our sister companies across the Adriatic region, we comprise the current MB Frigo Group.

Product Range and Flexibility
We specialise in the manufacture of cold rooms, refrigeration doors, and refrigerant units. The high flexibility of our range of products facilitates custom-made manufacture and adjustment to specific customer requests.

Manufacturing Line Modernisation
Continuous investments into the professional development of our employees and the modernisation of our range of products guarantee the delivery of top-quality products in accordance with EU and ISO 9001 norms.

Environmental Awareness
In all our activities, we take care that we comply with all relevant legal and industry regulations as well as environmental standards.
All company activities comply with ISO 14001: Environmental Management Systems.

COOLING CAPACITY RANGE

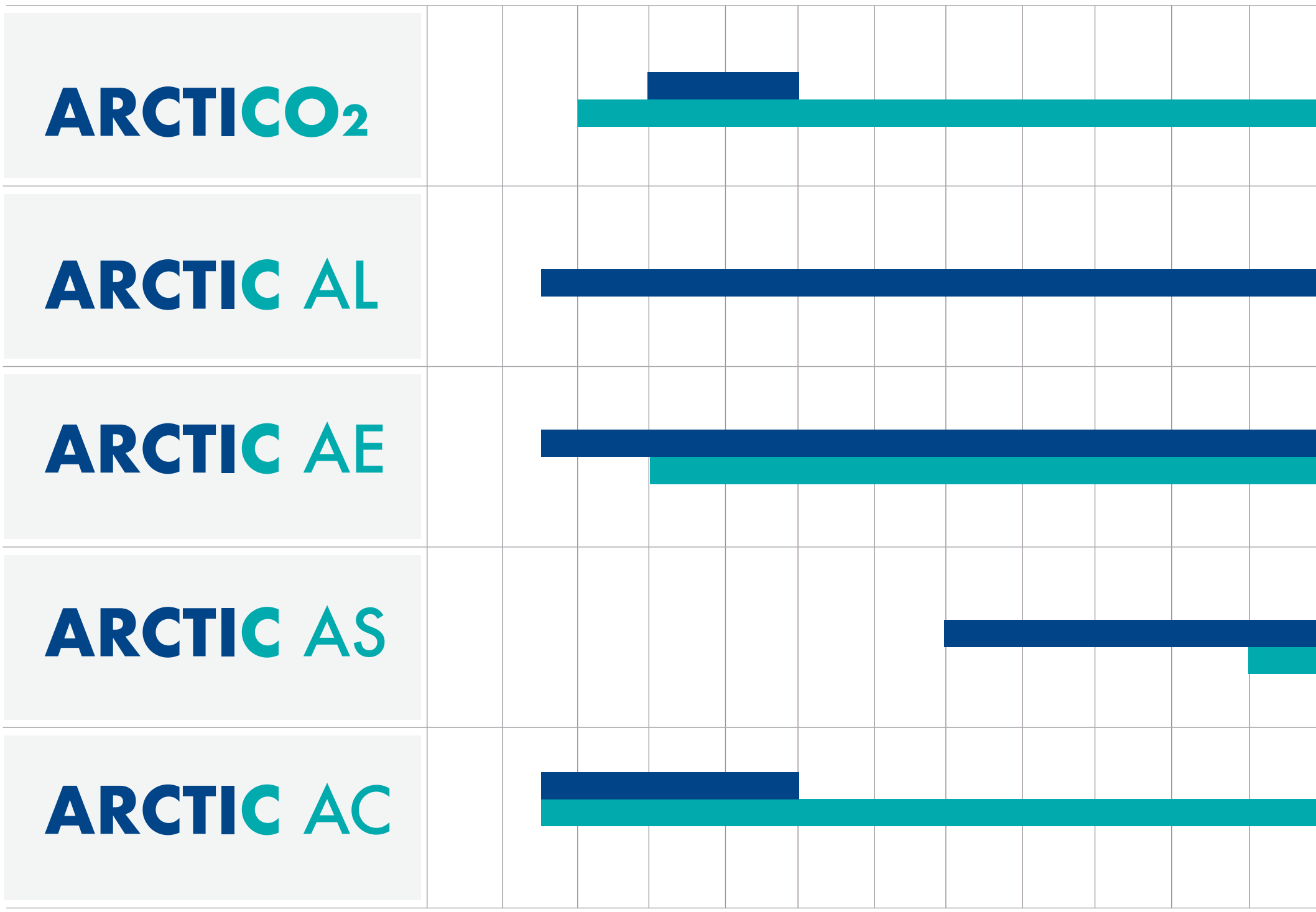

ARCTIC AL

ARCTIC AE

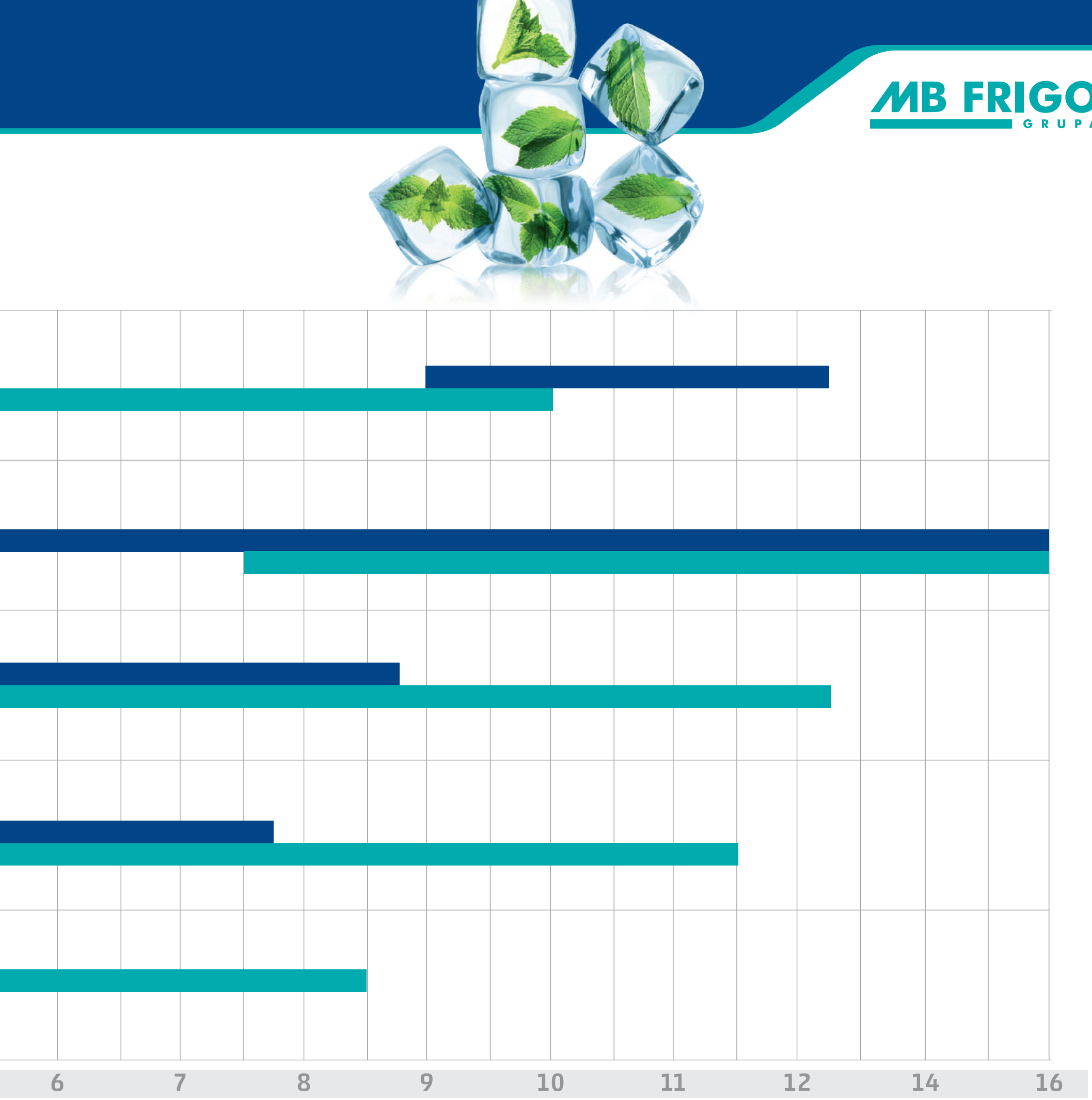

ARCTIC AS

ARCTIC AC

ARCTICO2

ARCTIC AL

REFRIGERATION UNIT

ARCTIC AL

commercial refrigeration units

Arctic AL refrigeration units are the ideal solution for commercial refrigeration.
The compact design ensures easier handling and installation in small spaces. Installation is applicable in all climate conditions thanks to its corrosion resistant design.
With Arctic AL units, customers can choose a wide range of additional options and adjust the system to their requirements.
They are an ideal choice for a quick and compact cooling solution.
Easier on-site preparation thanks to floor stands or wall mounting brackets.

NOMENCLATURE:

AL — 5 RU 1P T 1.7 MT — XXXXXX

- AL – type
- 5 – housing group
- RU – refrigeration unit
- 1P – 1P - single-phase connection; 3P - three-phase connection
- T – compressor manufacturer (T - Tecumseh)
- 1.7 – cooling capacity[3] [kW]
- MT – medium temp. pattern (LT – low temp. pattern)
- XXXXXX –
  - 0 - standard unit
  - 1 – housing for outdoor application
  - 2 - sound insulation (only with 1 option)
  - 3 – electrical cabinet
  - 4 – compressor safety, low pressure switch (fixed)
  - 5 - fan speed controller (instead of KP5)
  - 6 - compressor safety, low pressure switch (adjustable) Tisp= -35ºC
  - 7 - compressor safety, high/low pressure switch (KP15)
  - 8 - split unit (see table with explanations)

TABLE WITH OPTIONS

	EQUIPMENT	NOTE
BASIC EQUIPMENT	• hermetic compressor • crankcase heater for units with higher capacity compressor • air-cooled condenser with fan • liquid receiver • safety valve[2] • filter-drier with sight glass • vibration absorbers	• when choosing a refrigeration unit, in addition to unit's name please also specify the number of the option. • e. g. unit AL - 5RU1PT1.7MT - 0; with standard units only (see left) • e.g. unit AL - 5RU1PT1.7MT - 134; with protective housing, power supply and protection and a fixed protective pressure switch of the LP compressor • e.g. unit AL - 5RU1PT1.7MT - 8; contains all equipment from option 1 and option 3, and comes with an evaporator unit and a control unit
	• protect. pressure switch of the HP compressor • pressostatic regulation of cond. pressure	• protect. pressure switch of the compressor

OPTIONS	EQUIPMENT	NOTE
OPTION 1	• housing for outdoor application	• standard with option 8
OPTION 2	• sound insulation	• only with option 1
OPTION 3	• power supply and protection - compressor switch, el. heater, condenser fans, main switch (option 3)	• power distribution cabinet • to choose only with option 1. Electrical cabinet • power dist. cabinet standard with option 8 - plus stand. equipment (see left), • power dist. cabinet has consumer fuses (evaporator fans, el. defrost heater)
OPTION 4	• compressor safety, low pressure switch (fixed)	• automatic reset
OPTION 5	• fan speed controller	• the fan speed controller regulates pressure in the condenser so by selecting option 5 the pressure switch is removed from the stand. equipment
OPTION 6	• adjustable protective pressure switch of the LP compressor for Tisp= -35°C	• with option 6, an adjust. prot. pressure switch of the compressor is installed • applied in case when the desired evaporating of the LT model is -35°C
OPTION 7	• adjustable prot. pressure switch of the HP/LP compresso	• with option 7, an adjust. high/low pressure switch of the compressor is installed • with option 7 the fixed LP protective pressure switch is not installed • options 4 and 6 are not added with option 7
OPTION 8	• split unit • protective housing for outdoor use • power supply and protection - compressor switch, consumer fuses (condenser and evaporator fans, electric defrost heater), main switch	• option 8 completes the cooling system **(condensing unit, evaporator unit and control unit)**

2 Except for AL-3RU1PT0.7MT and AL-3RU1PT0.8MT
3 under conditions:
For R449A
•MT Te/Ta = -10 °C/+32 °C
•LT Te/Ta = -30 °C/+32 °C
• superheat 10 K
• subcooling 2 K
• Te evaporation temperature
• Ta ambient temperature

Note: The system can be filled with otherre refrigerant (R404A, R407F, R448A). Cooling capacities differ from those shown in the table in this data sheet. When option 8 is chosen, the cooling system may only be filled with R449A or R448A).

REFRIGERATION outside the cold room

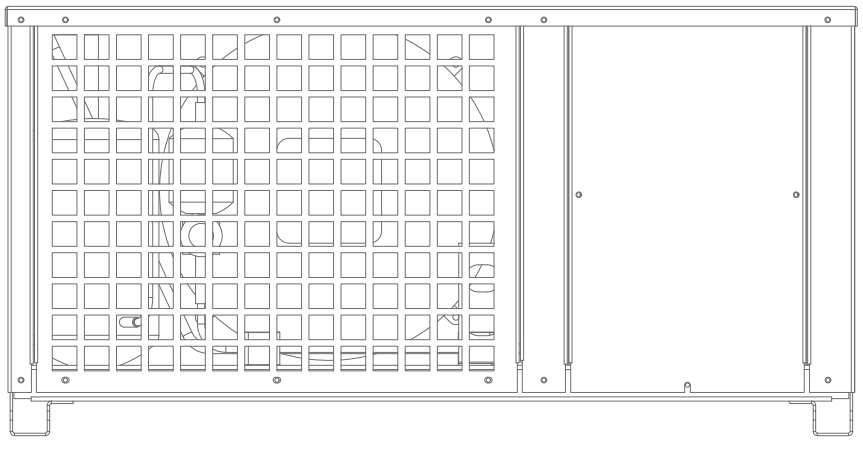

STANDARD UNIT
- hermetic compressor
- oil sump heater for higher power compressors[1]
- air-cooled condenser with fan
- liquid operating substance tank
- safety valve[2]
- filter-drier with inspection glass
- fixed protective pressure switch of the HP compressor
- regulation of condensation pressure via pressure switch
- anti-vibrants on units where øSL >= 22mm

STANDARD UNIT (with option 8)
- protective housing for outdoor use
- fixed protective pressure switch of the LP compressor, automatic
- power supply and protection - compressor switch, consumer fuses (condenser and evaporator fans, electric defrost heater), main switch

EVAPORATOR UNIT inside the cold room

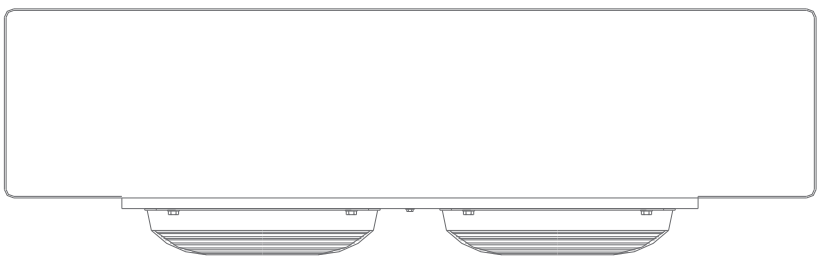

STANDARD UNIT (option 8):
- SmartCella
- two temperature probes

CONTROL UNIT outside the cold room

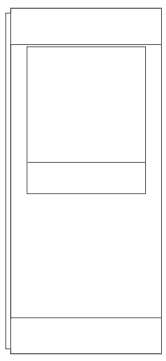

STANDARD UNIT (option 8):
- SmartCella
- two temperature probes

FEATURES:
- compact design
- PED I
- easy mounting
- design with anti-corrosion protection
- refrigerant with GWP(GWP=1397), R449A

ASSEMBLY ACCESSORIES:
- floor stand
- mounting brackets

ACCESSORIES (see table with options):
- protective housing for outdoor use (standard with option 8)
- sound insulation (with protective housing only)
- power supply and protection (with protective housing only; standard with option 8)
- fixed protective pressure switch of the LP compressor
- fan speed controller
- fixed protective pressure switch of the LP compressor for Tisp= -35 °C
- adjustable protective pressure switch of the HP/LP compressor
- refrigeration units

2 Except for 3CU1PT0.7MT and 3CU1PT0.8MT

Note: The system can be filled with other refrigerants (R404A, R407F, R448A). Cooling capacities differ from those shown in the table in this data sheet. With option 8, the cooling system may only be filled with R449A or R448A).

COOLING CAPACITY:

Refrigeration unit MT MODEL	Condensing unit				Evaporator unit (option 8)[4]
	Compressor	Cooling capacity [kW][3] Te/Ta -10°C/+32°C	Connections ØSL	Connections ØLL	
AL-3RU1PT0.7MT	AE 4450 Z	0,7	10	6	EVS 61 ED
AL-3RU1PT0.8MT	AE 4460 Z	0,8	10	6	EVS 101 ED
AL-4RU1PT1.1MT	CAJ 9480 Z	1,1	12	10	EVS 131 ED
AL-4RU1PT1.3MT	CAJ 9510 Z	1,3	16	10	EVS 201 ED
AL-5RU1PT1.7MT	CAJ 9513 Z	1,7	16	10	EVS 201 ED
AL-5RU1PT1.9MT	CAJ 4517 Z	1,9	16	10	EVS 181 ED
AL-6RU1PT2.5MT	CAJ 4519 Z	2,5	16	10	EVS 291 ED
AL-6RU3PT2.8MT[1]	TFH 4524 Z	2,8	16	10	EVS 391 ED
AL-6RU3PT3.6MT[1]	TFH 4531 Z	3,6	22	10	EVS 521 ED
AL-7RU3PT4.7MT[1]	TFH 4540 Z	4,7	22	10	GCE 254E8 ED
AL-7RU3PT5.7MT[1]	TAG 4553 Z	5,7	22	10	GCE 352E8 ED
AL-7RU3PT6.6MT[1]	TAG 4561 Z	6,6	28	10	GCE 313F8 ED
AL-7RU3PT7.8MT[1]	TAG 4568 Z	7,8	28	10	GCE 314F8 ED
AL-7RU3PT8.4MT[1]	TAG 4573 Z	8,4	28	10	GCE 314F8 ED

Refrigeration unit LT MODEL	Condensing unit				IEvaporator unit (option 8)[4]
	Compressor	Cooling capacity [kW][3] Te/Ta -10°C/+32°C	Connections ØSL	Connections ØLL	
AL-4RU1PT0.8LT	CAJ 2464 Z	0,8	16	10	GCE 251E8R ED
AL-5RU1PT1.1LT[1]	FH 2480 Z	1,1	16	10	GCE 251E8 ED
AL-5RU3PT1.1LT[1]	TFH 2480 Z	1,1	16	10	GCE 251E8 ED
AL-5RU3PT1.4LT[1]	TFH 2511 Z	1,4	16	10	GCE 252G8 ED
AL-7RU3PT1.8LT[1]	TAG 2516 Z	1,8	22	10	GCE 253E8 ED
AL-7RU3PT2.3LT[1]	TAG 2519 Z	2,3	22	10	GCE 253E8 ED
AL-7RU3PT2.6LT[1]	TAG 2522 Z	2,6	22	10	GCE 253E8 ED

REPLACEMENT FOR FH/TFH compressors

- TECUMSEH is replacing FH and TFH compressors with new FH2 compressors to be installed when the stock of existing FH and TFH runs out.
- The table below shows the new designation of the compressor that is being replaced in the Arctic AL product series.

	FH/TFH	FH2
LT MODELS	FH2480Z-FZ	FH2480Z-XC3A
	TFH2480Z-TZ	FH2480ZXG1A
	TFH2511Z-TZ	FH2511Z-XG1A
MT MODELS	TFH4524Z-TZ	FH4524-XG1A
	TFH4531Z-TZ	FH4532-XG1A
	TFH4540Z-TZ	FH4538Z-XG1A

• XC- single-phase • XG - three-phase

3 Under conditions:
For R449A
- MT Te/Ta = -10 °C/+32 °C
- LT Te/Ta = -30 °C/+32 °C

- superheat 10 K
- subcooling 2 K
- Te evaporation temperature
- Ta ambient temperature
- 4 applies only for R449A

ØSL suction line
ØLL liquid line

OPTION 8 (SPLIT UNIT)

CHOOSING A SPLIT UNIT (OPTION 8):

The table below refers to temperature maintenance in rooms i.e. goods enter the room already cooled.
Cold rooms must be properly insulated.

Max. room volume			
Cooling temperature	0ºC/+2ºC	+4ºC	+6ºC
AL-3RU1PT0.7MT	4 m^3	5 m^3	6 m^3
AL-3RU1PT0.8MT	6 m^3	8 m^3	9 m^3
AL-4RU1PT1.1MT	10 m^3	12 m^3	14 m^3
AL-4RU1PT1.3MT	14 m^3	16 m^3	18 m^3
AL-5RU1PT1.7MT	18 m^3	22 m^3	25 m^3
AL-5RU1PT1.9MT	20 m^3	24 m^3	27 m^3
AL-6RU1PT2.5MT	28 m^3	32 m^3	35 m^3
AL-6RU3PT2.8MT	38 m^3	45 m^3	50 m^3
AL-6RU3PT3.6MT	50 m^3	60 m^3	65 m^3
AL-7RU3PT4.7MT	70 m^3	80 m^3	90 m^3
AL-7RU3PT5.7MT	80 m^3	90 m^3	100 m^3
AL-7RU3PT6.6MT	95 m^3	105 m^3	110 m^3
AL-7RU3PT7.8MT	120 m^3	130 m^3	140 m^3
AL-7RU3PT8.4MT	140 m^3	150 m^3	160 m^3

Max. room volume	
Cooling temperature	-20ºC/-18ºC
AL-4RU1PT0.8LT	5 m^3
AL-5RU1PT1.1LT	8 m^3
AL-5RU3PT1.1LT	8 m^3
AL-5RU3PT1.4LT	15 m^3
AL-7RU3PT1.8LT	25 m^3
AL-7RU3PT2.3LT	30 m^3
AL-7RU3PT2.6LT	40 m^3

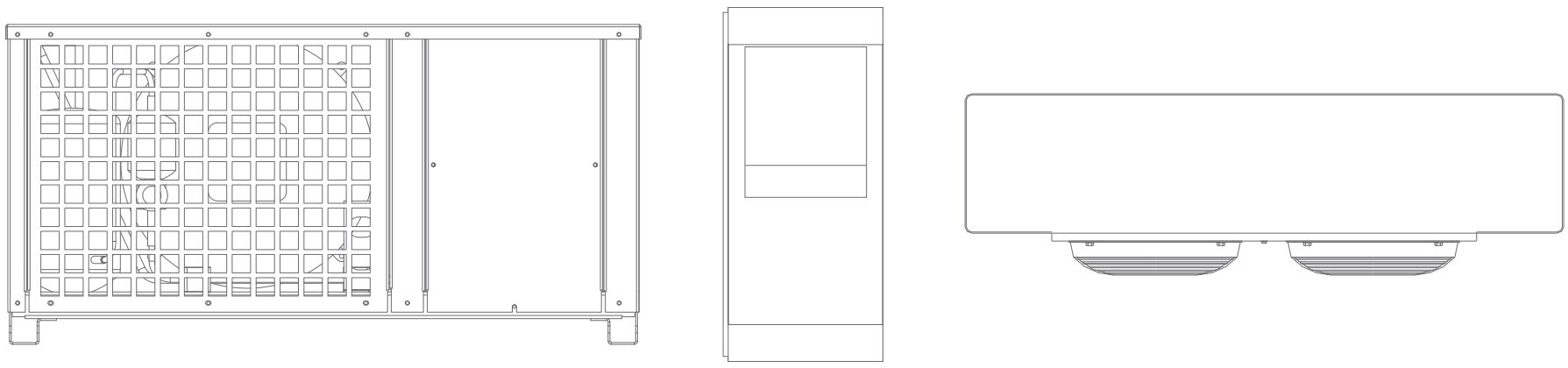

POWER SUPPLY:

Refrigeration unit MT MODEL	Condensing unit				Evaporator unit			
	Compressor	Power supply	Imax [A]	Pmax [kW]	Evaporator	Power supply	Imax [A]	Pmax [kW]
AL-3RU1PT0.7MT	AE 4450 Z (FZ)	230 V/1~/50 Hz	6,2	0,7	EVS 61 ED	230 V/1~/50 Hz	2,4	0,5
AL-3RU1PT0.8MT	AE 4460 Z (FZ)	230 V/1~/50 Hz	7,5	0,8	EVS 101 ED	230 V/1~/50 Hz	3,5	0,8
AL-4RU1PT1.1MT	CAJ 9480 Z (F/T)	230 V/1~/50 Hz	7,6	1,1	EVS 131 ED	230 V/1~/50 Hz	3,7	0,8
AL-4RU1PT1.3MT	CAJ 9510 Z (F/T)	230 V/1~/50 Hz	9,2	1,3	EVS 201 ED	230 V/1~/50 Hz	3,7	0,8
AL-5RU1PT1.7MT	CAJ 9513 Z (F/T)	230 V/1~/50 Hz	11,6	1,6	EVS 201 ED	230 V/1~/50 Hz	3,7	0,8
AL-5RU1PT1.9MT	CAJ 4517 Z (F/T)	230 V/1~/50 Hz	13,0	1,8	EVS 181 ED	230 V/1~/50 Hz	5,7	1,3
AL-6RU1PT2.5MT	CAJ 4519 Z (F/T)	230 V/1~/50 Hz	15,6	2,5	EVS 291 ED	230 V/1~/50 Hz	6,3	1,4
AL-6RU3PT2.8MT[1]	TFH 4524 Z	400 V/3~/50 Hz	8,1	2,7	EVS 391 ED	230 V/1~/50 Hz	6,3	1,4
AL-6RU3PT3.6MT[1]	TFH 4531 Z	400 V/3~/50 Hz	8,9	3,5	EVS 521 ED	230 V/1~/50 Hz	8,4	1,8
AL-7RU3PT4.7MT[1]	TFH 4540 Z	400 V/3~/50 Hz	9,8	4,5	GCE 254E8 ED	400 V/3~/50 Hz	9,1	4,8
AL-7RU3PT5.7MT[1]	TAG 4553 Z	400 V/3~/50 Hz	14,0	5,6	GCE 352E8 ED	400 V/3~/50 Hz	6,5	3,6
AL-7RU3PT6.6MT[1]	TAG 4561 Z	400 V/3~/50 Hz	16,9	6,4	GCE 313F8 ED	400 V/3~/50 Hz	8,7	5,2
AL-7RU3PT7.8MT[1]	TAG 4568 Z	400 V/3~/50 Hz	19,4	7,2	GCE 314F8 ED	400 V/3~/50 Hz	11,21	6,8
AL-7RU3PT8.4MT[1]	TAG 4573 Z	400 V/3~/50 Hz	20,6	8,0	GCE 314F8 ED	400 V/3~/50 Hz	11,21	6,8

Refrigeration unit LT MODEL	Condensing unit				Evaporator unit			
	Compressor	Power supply	Imax [A]	Pmax [kW]	Evaporator	Power supply	Imax [A]	Pmax [kW]
AL-4RU1PT0.8LT	CAJ 2464 Z	230 V/1~/50 Hz	10,8	1,6	GCE 251E8R ED	230 V/1~/50 Hz	3,9	0,8
AL-5RU1PT1.1LT[1]	FH 2480 Z	230 V/1~/50 Hz	16,3	2,3	GCE 251E8 ED	230 V/1~/50 Hz	5,6	1,2
AL-5RU3PT1.1LT[1]	TFH 2480 Z	400 V/3~/50 Hz	5,1	2,3	GCE 251E8 ED	230 V/1~/50 Hz	5,6	1,2
AL-5RU3PT1.4LT[1]	TFH 2511 Z	400 V/3~/50 Hz	7,5	3,0	GCE 252G8 ED	230 V/1~/50 Hz	11,1	2,4
AL-7RU3PT1.8LT[1]	TAG 2516 Z	400 V/3~/50 Hz	10,1	4,0	GCE 253E8 ED	400 V/3~/50 Hz	5,5	3,6
AL-7RU3PT2.3LT[1]	TAG 2519 Z	400 V/3~/50 Hz	11,0	4,2	GCE 253E8 ED	400 V/3~/50 Hz	5,5	3,6
AL-7RU3PT2.6LT[1]	TAG 2522 Z	400 V/3~/50 Hz	14,0	5,0	GCE 253E8 ED	400 V/3~/50 Hz	5,5	3,6

REPLACEMENT FOR FH/TFH compressors

- TECUMSEH is replacing FH and TFH compressors with new FH2 compressors to be installed when the stock of existing FH and TFH runs out.
- The table below shows the new designation of the compressor that is being replaced in the Arctic AL product series.

	FH/TFH	FH2
LT MODELS	FH2480Z-FZ	FH2480Z-XC3A
	TFH2480Z-TZ	FH2480ZXG1A
	TFH2511Z-TZ	FH2511Z-XG1A
MT MODELS	TFH4524Z-TZ	FH4524-XG1A
	TFH4531Z-TZ	FH4532-XG1A
	TFH4540Z-TZ	FH4538Z-XG1A

• XC- single-phase • XG- three-phase

- Pmax maximum electrical power
- Imax maximum electric current

CONDENSING UNIT outside the cold room

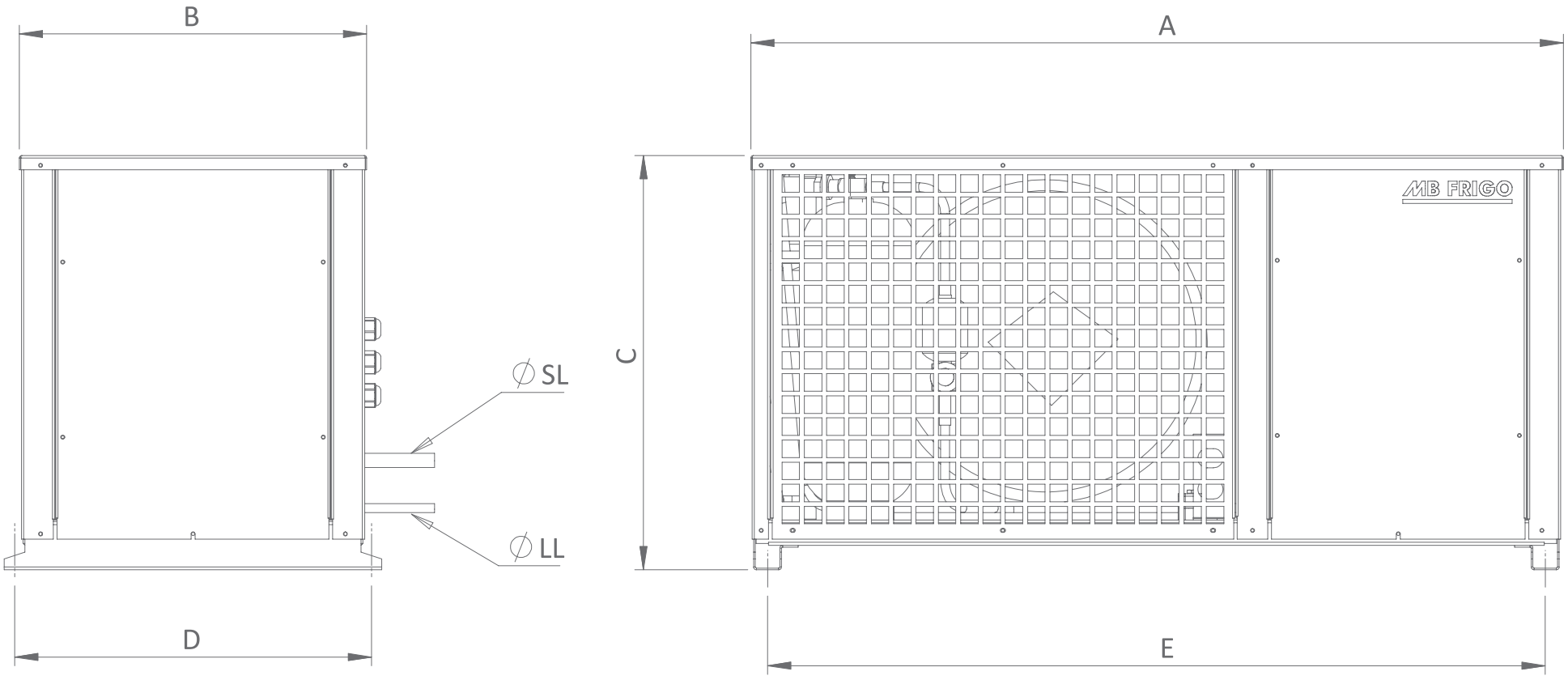

Refrigeration unit MT MODEL	Dimensions [mm]					Weight[5]
	A	B	C	D	E	[kg]
AL-3RU1PT0.7MT	691	367	348	383	651	30
AL-3RU1PT0.8MT	691	367	348	383	651	31
AL-4RU1PT1.1MT	846	367	398	383	806	57
AL-4RU1PT1.3MT	846	367	398	383	806	58
AL-5RU1PT1.7MT	978	397	473	413	938	66
AL-5RU1PT1.9MT	978	397	473	413	938	68
AL-6RU1PT2.5MT	1052	454	573	470	1012	86
AL-6RU3PT2.8MT	1052	454	573	470	1012	95
AL-6RU3PT3.6MT	1052	454	573	470	1012	96
AL-7RU3PT4.7MT	1359	553	674	564	1319	131
AL-7RU3PT5.7MT	1359	553	674	564	1319	131
AL-7RU3PT6.6MT	1359	553	674	564	1319	144
AL-7RU3PT7.8MT	1359	553	674	564	1319	146
AL-7RU3PT8.4MT	1359	553	674	564	1319	146

Refrigeration unit LT MODEL	Dimensions [mm]					Weight[5]
	A	B	C	D	E	[kg]
AL-4RU1PT0.8LT	846	367	398	383	806	59
AL-5RU1PT1.1LT	978	397	473	413	938	83
AL-5RU3PT1.1LT	978	397	473	413	938	78
AL-5RU3PT1.4LT	978	397	473	413	938	79
AL-7RU3PT1.8LT	1359	553	674	564	1319	145
AL-7RU3PT2.3LT	1359	553	674	564	1319	145
AL-7RU3PT2.6LT	1359	553	674	564	1319	165

5 Units weight includes housing for outdoor application, power supply and protection. Weights are approximate and are subject to change.

ARCTIC AL

FLOOR STANDS

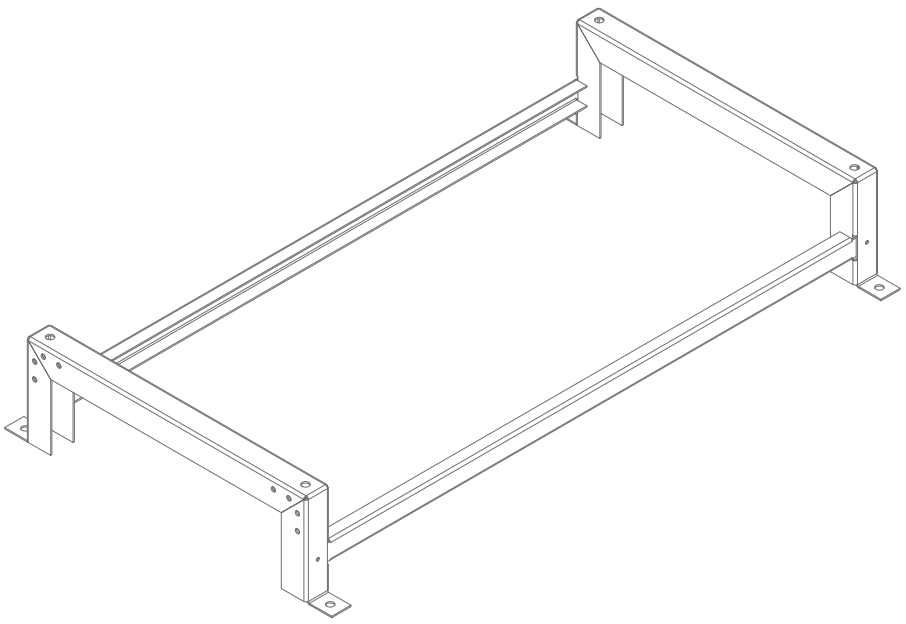

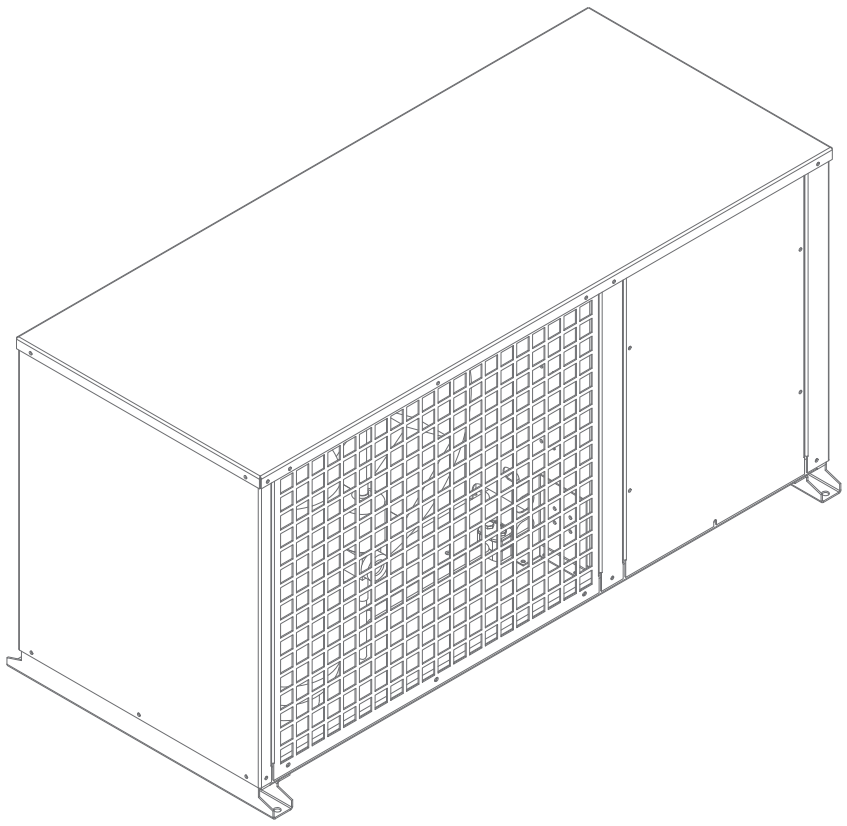

Housing group	A	B	C	D	E	F	G	H
3	423	499	689	463	383	651	11	150
4	423	499	842	463	383	806	11	150
5	453	529	976	493	413	938	11	150
6	510	586	1050	550	470	1012	11	150
7	610	686	1357	650	570	1319	11	150

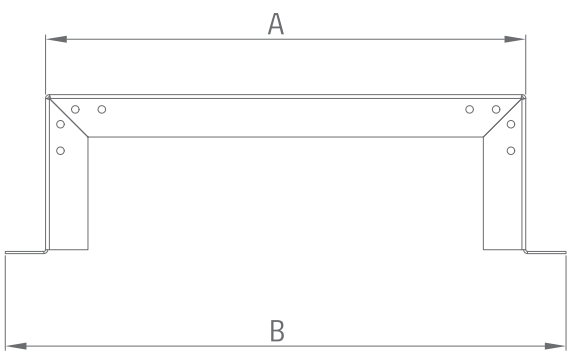

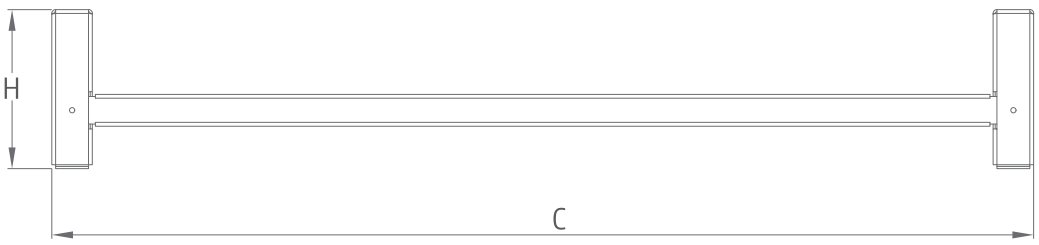

MOUNTING BRACKETS

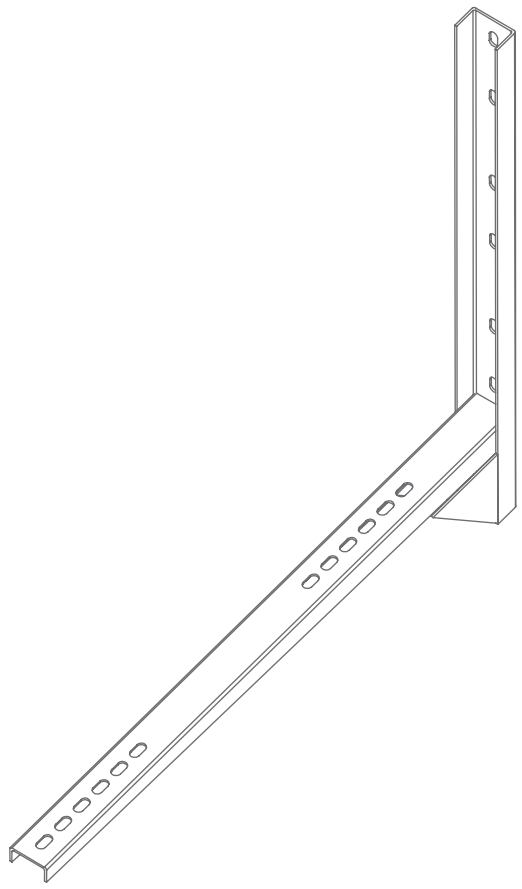

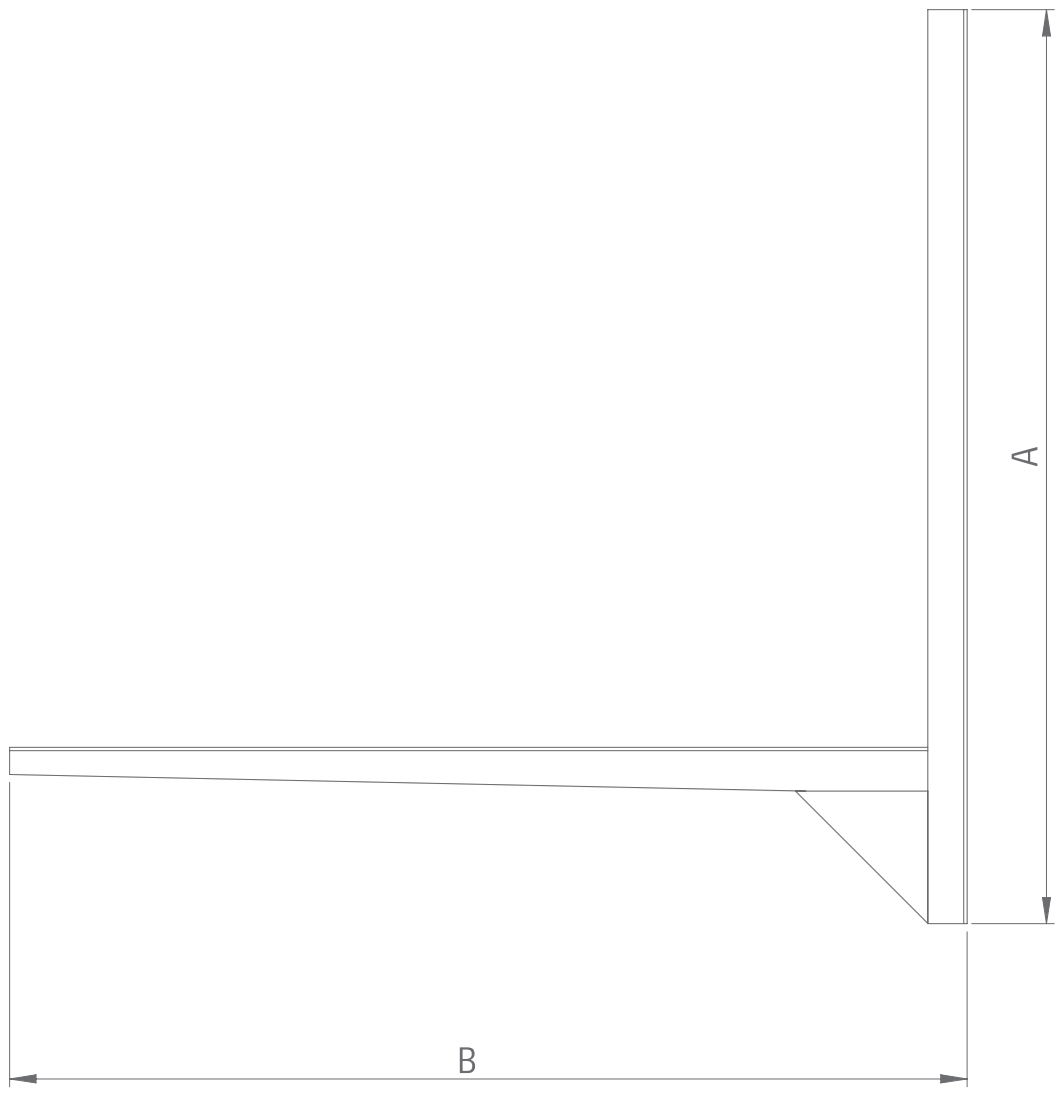

Housing group	Name	A	B	Slots
3 and 4	Floor bracket C - Zn	590	590	ø10x20
3 and 4	Floor bracket C - Zn + Pl	590	590	ø10x20
5 and 6	Wall bracket 5/6CU - Zn	690	720	ø10x20
5 and 6	Wall bracket 5/6CU - Zn + Pl	690	720	ø10x20
5, 6 and 7	Wall bracket 7CU - Zn	770	800	ø10x20
5, 6 and 7	Wall bracket 7CU - Zn + Pl	770	800	ø10x20

• slots layout for wall brackets are given on the following page

Dimensions are expressed in millimetres (mm).

ARCTIC AL

SLOT LAYOUT FOR MOUNTING BRACKETS

Wall bracket for design groups 3 and 4

- mounting brackets 15339 (galvanized) and wall bracket 33497 (plasticized)

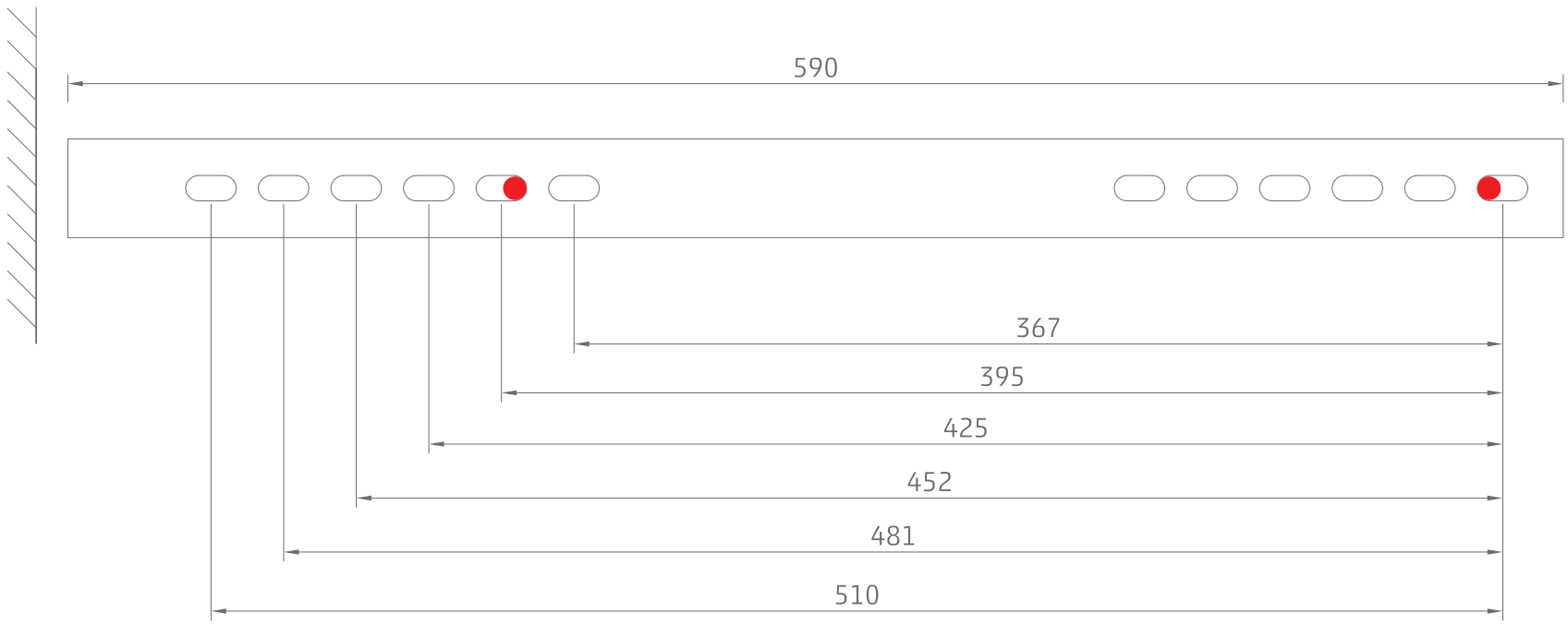

Mounting brackets for design groups 5 and 6

- mounting brackets 38964 (galvanized) and wall backet 38965 (plasticized)

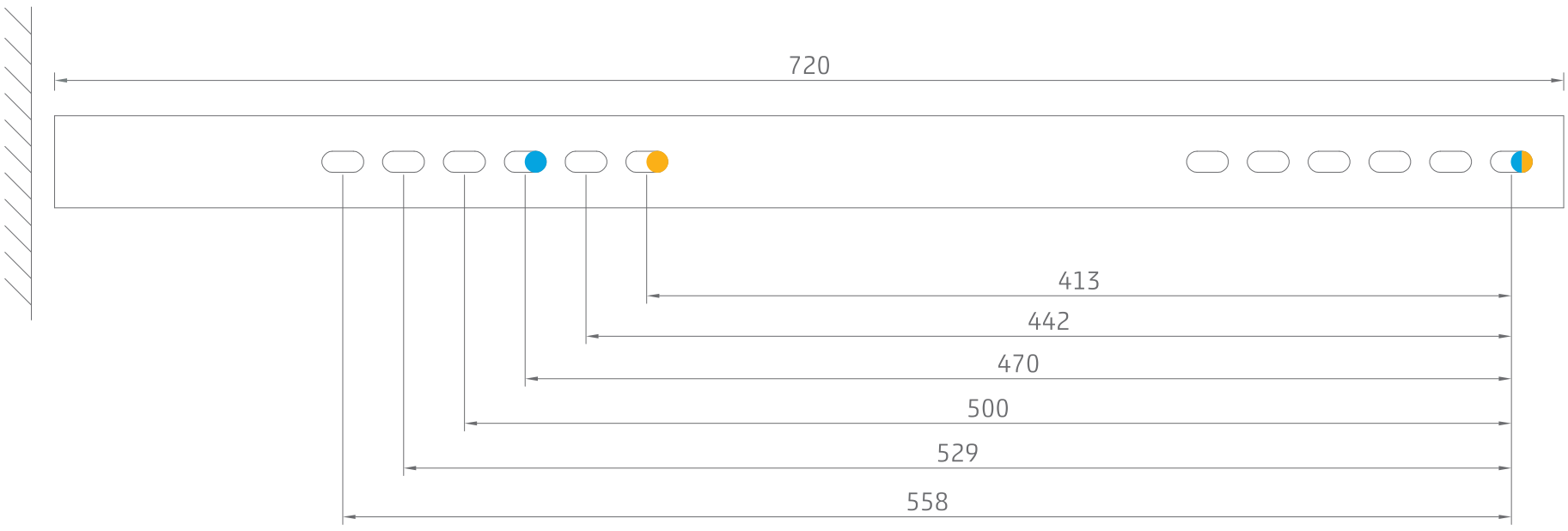

Dimensions are expressed in millimetres (mm).

Mounting brackets for design groups 5, 6 and 7

- Mounting brackets 38966 (galvanized) and wall bracket 38967 (plasticized)
- If need be, this bracket may also be used for groups 5 and 6

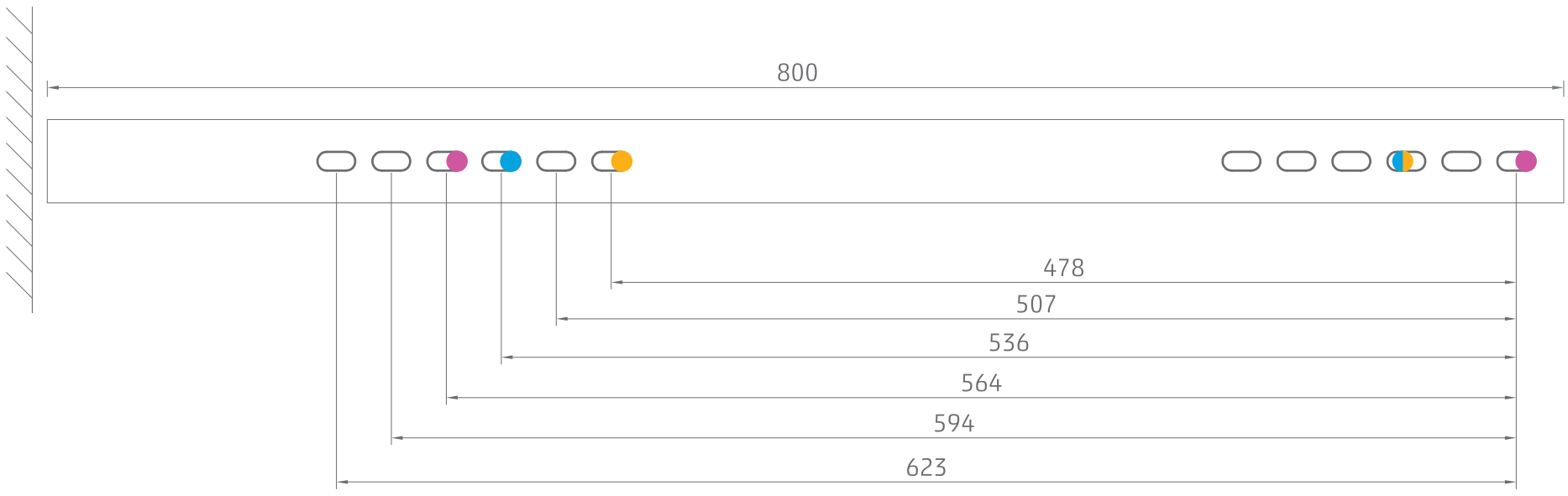

- design groups 3 and 4
- design group 5
- design group 6
- design group 7

Dimenzije su u milimetrima (mm).

EVAPORATOR UNIT inside the cold room

Evaporator	Dimensions			Weight
	D	Š	V	[kg]
EVS 61 ED	411	433	120	4,6
EVS 101 ED	611	433	120	6,7
EVS 131 ED	611	433	120	7,3
EVS 201 ED	605	435	170	10,7
EVS 181 ED	1111	433	120	10,5
EVS 291 ED	1111	433	120	11,5
EVS 391 ED	1105	435	170	17
EVS 521 ED	1455	435	170	23
GCE 254E8 ED	2124	509	431	39
GCE 313F8 ED	1974	561	468	45
GCE 314F8 ED	2524	561	424	58,5
GCE 251E8R ED	674	409	390	12
GCE 251E8 ED	774	509	431	13,5
GCE 252G8 ED	1224	509	431	20
GCE 253E8 ED	1674	509	431	31
GCE 352E8 ED	1130	608	499	39.5

ARCTIC AE

REFRIGERATION UNITS

ARCTIC AE

commercial refrigeration units

Arctic AE refrigeration units are the ideal solution for use in commercial refrigeration, large-scale system. The compact design ensures easier handling and installation in small spaces. Installation is applicable in all climate conditions thanks to its corrosion resistant design. The standard equipment includes elements that improve the operation of the refrigeration unit and enable greater energy efficiency. Easier on-site preparation thanks to floor stands or wall mounting brackets.

NOMENCLATURE:

AE	—	Z1	RU	3P	E	5.6	MT	—	XXXX
Type		housing group	Refrigeration units unit	1P- single-phase conn. 3P- three-phase conn.	compressor manufacturer (E - Embraco)	cooling capacity[1] [kW]	medium temp. pattern (LT- low temp. pattern)		0- standard units 1- sound insulation 2- compressor safety high/low pressure switch 3- ball valve LL

TABLE WITH OPTIONS

	EQUIPMENT	NOTE
BASIC EQUIPMENT	• hermetic scroll compressor • protective housing for outdoor installation • crankcase heater • vibration dampeners • electrical cabinet • air cooled condenser with EC fan • liquid receiver • safety valve • fixed high/low pressure switch • fan speed controller • DTC valve for cooling the compressor head (only in LT version)	• when choosing a refrigeration unit, in addition to its name please also specify the number of the option • e.g. unit AE - Z1RU3PT5.6MT - 0; standard unit • e.g. unit AE - Z1RU3PT5.6MT - 12; with sound insulation and adjustable protective pressure switch of the HP/LP compressor

OPCIJE	EQUIPMENT	NOTE
OPTION 1	• sound insulation	• Side walls of the "engine room" are insulated
OPTION 2	• compressor safety high/low pressure switch	• With option 2, the fixed pressure switch from the standard unit is not installed.
OPTION 3	• ball valve LL	• ball valve on the liquid line

1 under the following conditions:
•MT Te/Ta = -10 C/+32 C
•LT Te/Ta = -30 C/+32 C
•superheat 10K
•subcooling 2K
•Te evaporation temperature
•Ta ambient temperature

CONDENSING UNIT outside the cold room

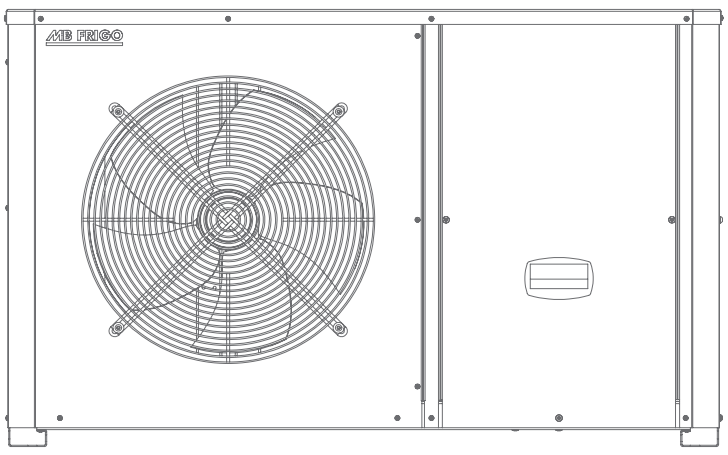

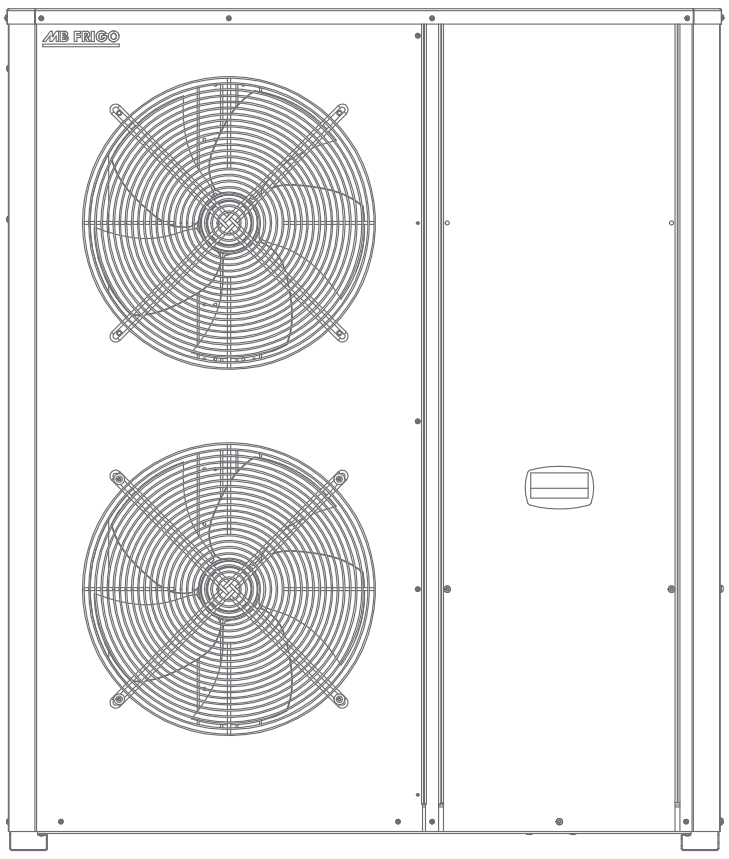

STANDARD UNIT:
- scroll compressor
- protective housing for outdoor installation
- electrical cabinet
- crankcase heater
- vibration dampeners
- air cooled condenser with EC fan
- liquid receiver
- safety valve
- fixed high/low pressure switch
- fan speed controller
- DTC valve for cooling of the compressor head (only in LT version)

FEATURES:
- evaporation operating range for MT units from -10ºC to 0ºC
- evaporation operating range for LT units from -30ºC to -25ºC
- compact design with anti-corrosion protection
- simple installation
- refrigerant with low GWP (GWP = 1397) R449A

ACCESSORIES (see table with options):
- sound insulation
- adjustable protective pressure switch of the HP/LP compressor
- ball valve LL

ASSEMBLY ACCESSORIES:
- floor stands

COOLING CAPACITY:

Refrigeration unit MT MODEL	Condensing unit				
	Compressor	Cooling capacity [kW]		Connections	
		te/ta		ϕSL	ϕLL
		-10°C/+32°C	-5°C/+32°C		
AE-Z1RU3PE5.6MT	SE6026GS	5.6	6.6	22	10
AE-Z1RU3PE6.5MT	SE6030GS	6.5	7.7	22	10
AE-Z2RU3PE8.0MT	SE3036GS	8.0	9.6	28	12
AE-Z2RU3PE9.5MT	SE6043GS	9.5	11.4	28	12
AE-Z2RU3PE11.5MT	SE6053GS	11.5	13.7	28	16

Refrigeration unit MT MODEL	Condensing unit				
	Compressor	Cooling capacity [kW]		Connections	
		te/ta		ϕSL	ϕLL
		-30°C/+32°C	-25°C/+32°C		
AE-Z1RU3PE3.6LT	SE2017GS	3.6	4.3	28	10
AE-Z1RU3PE4.3LT	SE2020GS	4.3	5.2	28	10
AE-Z2RU3PE5.4LT	SE2023GS	5.4	6.5	28	10
AE-Z2RU3PE6.3LT	SE2028GS	6.3	7.6	28	10
AE-Z2RU3PE7.3LT	SE2031GS	7.3	8.9	42	12
AE-Z2RU3PE8.2LT	SE2039GS	8.2	10.0	42	12

- Te evaporation temperature
- Ta ambient temperature
- Pmax maximum electrical power
- Imax maximum electric current
- ø SL suction line
- ø LL liquid line

WORKING CONDITIONS:
- superheat 10K
- subcooling 2K

OPTION 8 (SPLIT UNIT)

POWER SUPPLY:

Refrigeration unit MT MODEL	Condensing unit			
	Compressor	Power supply	Imax [A]	Pmax [kW]
AE-Z1RU3PE5.6MT	SE6026GS	400 V/3~/50 Hz	11	4.3
AE-Z1RU3PE6.5MT	SE6030GS	400 V/3~/50 Hz	12	4.6
AE-Z2RU3PE8.0MT	SE3036GS	400 V/3~/50 Hz	14	5.6
AE-Z2RU3PE9.5MT	SE6043GS	400 V/3~/50 Hz	16	6.5
AE-Z2RU3PE11.5MT	SE6053GS	400 V/3~/50 Hz	19	7.8

Refrigeration unit MT MODEL	Condensing unit			
	Compressor	Power supply	Imax [A]	Pmax [kW]
AE-Z1RU3PE3.6LT	SE2017GS	400 V/3~/50 Hz	12	1.6
AE-Z1RU3PE4.3LT	SE2020GS	400 V/3~/50 Hz	14	1.8
AE-Z2RU3P5.4LT	SE2023GS	400 V/3~/50 Hz	19	2.4
AE-Z2RU3PE6.3LT	SE2028GS	400 V/3~/50 Hz	21	2.8
AE-Z2RU3PE7.3LT	SE2031GS	400 V/3~/50 Hz	24	3.1
AE-Z2RU3PE8.2LT	SE2039GS	400 V/3~/50 Hz	27	3.4

- Te evaporation temperature
- Ta ambient temperature
- Pmax maximum electrical power
- Imax maximum electric current
- ø SL suction line
- ø LL liquid line

WORKING CONDITIONS:
- superheat 10K
- subcooling 2K

CONDENSING UNIT • design group Z1

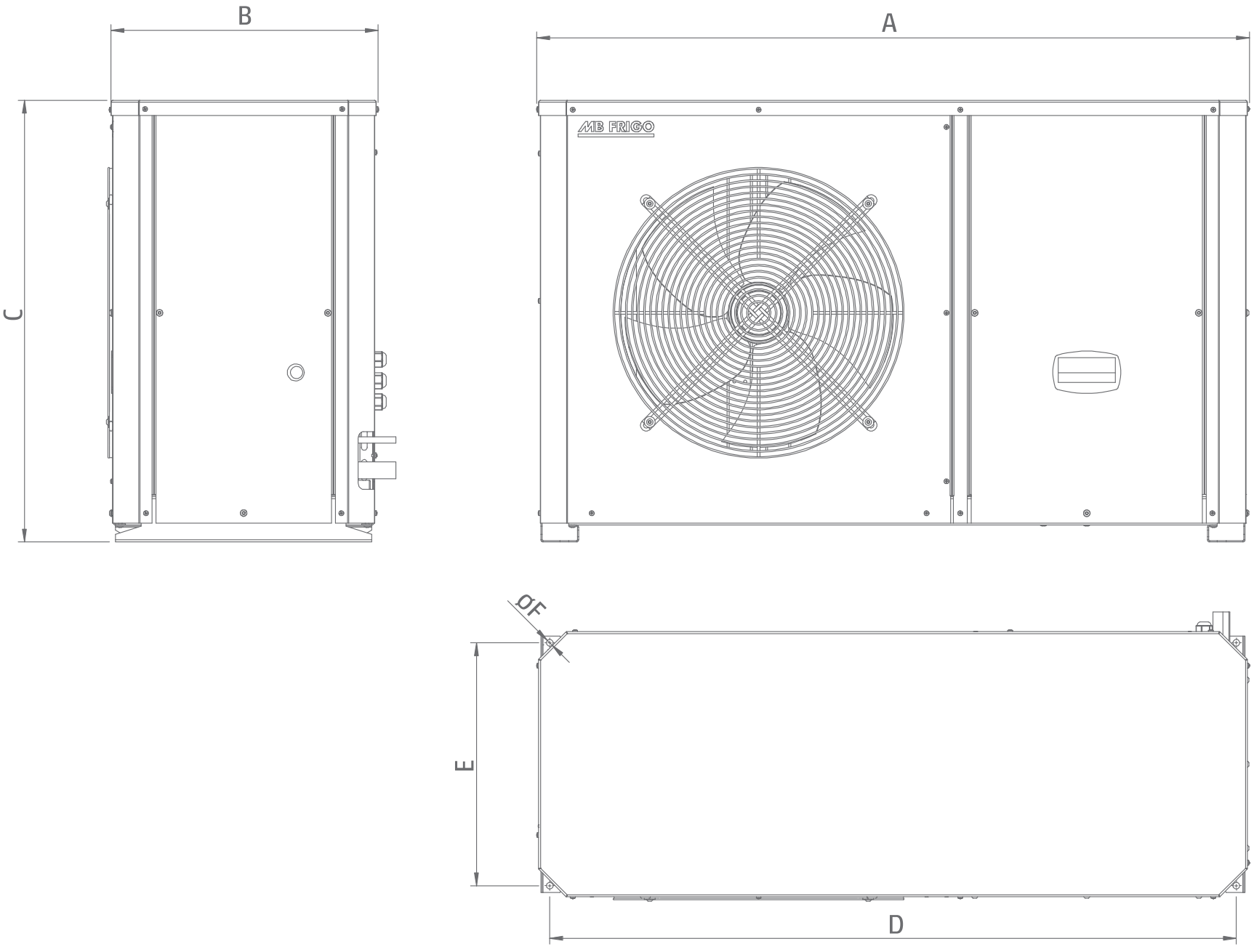

Housing group	Dimensions [mm]						Weight[4]
	A	B	C	D	E	F	[kg]
AE-Z1RU3PE5.6MT	1170	438	729	1133	400	11	117
AE-Z1RU3PE6.5MT	1170	438	729	1133	400	11	117
AE-Z1RU3PE3.6LT	1170	438	729	1133	400	11	117
AE-Z1RU3PE4.3LT	1170	438	729	1133	400	11	117

4 Units weights include housing for outdoor application, power supply and protection. Weights are approximate and are subject to change.

CONDENSING UNIT • design group Z2

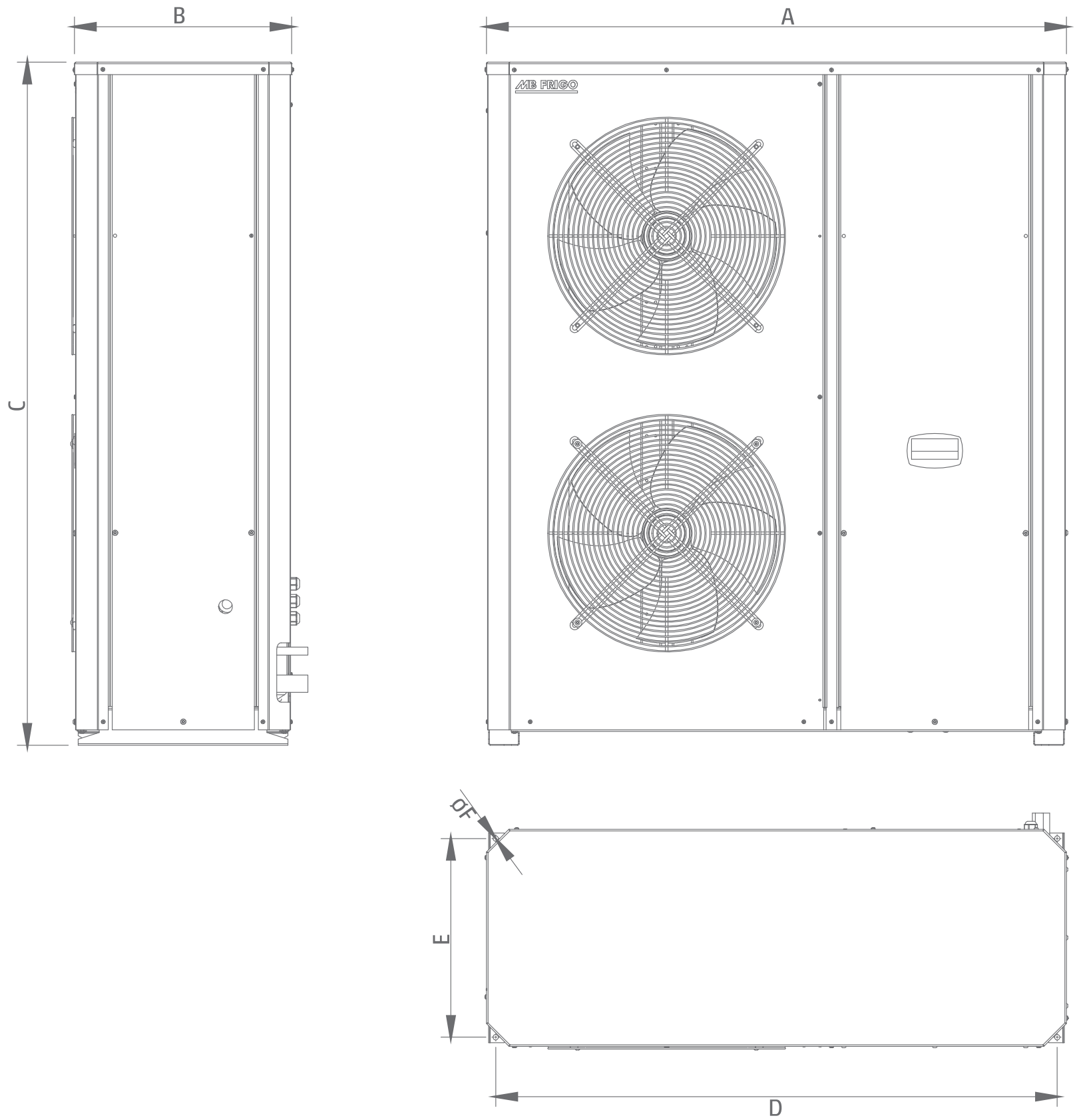

Housing group	Dimensions [mm]						Weight[4]
	A	B	C	D	E	F	[kg]
AE-Z2RU3PE8.0MT	1170	438	1380	1133	400	11	171
AE-Z2RU3PE9.5MT	1170	438	1380	1133	400	11	178
AE-Z2RU3PE11.5MT	1170	438	1380	1133	400	11	178
AE-Z2RU3PE5.4LT	1170	438	1380	1133	400	11	171
AE-Z2RU3PE6.3LT	1170	438	1380	1133	400	11	171
AE-Z2RU3PE7.3LT	1170	438	1380	1133	400	11	178
AE-Z2RU3PE8.2LT	1170	438	1380	1133	400	11	178

4 Units weight includes protective housing, power supply and protection. Weights indicated are approximate and are subject to change.

MOUNTING BRACKETS

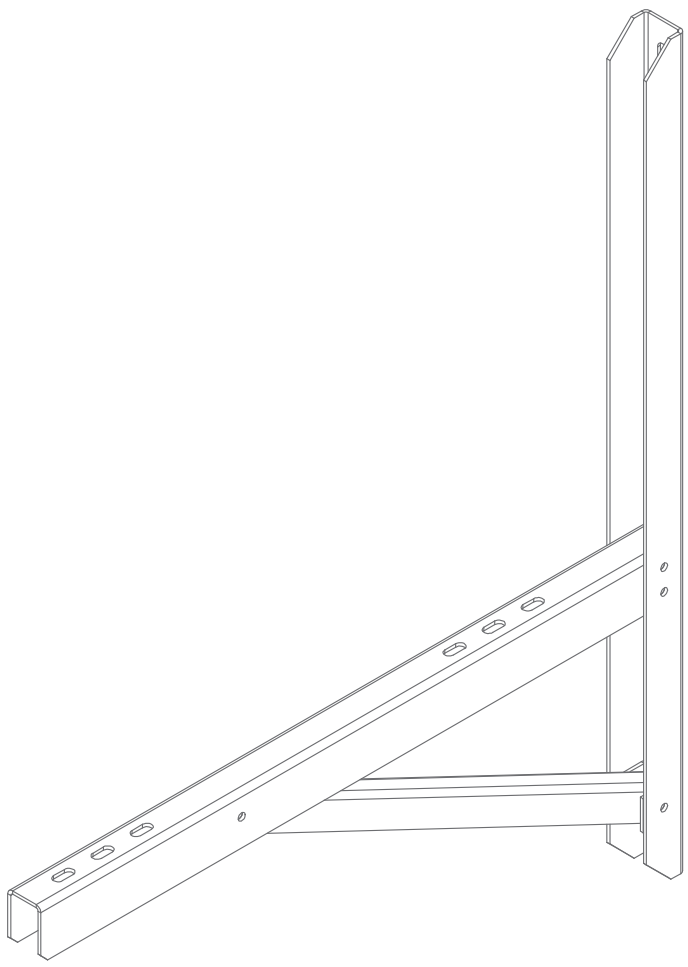

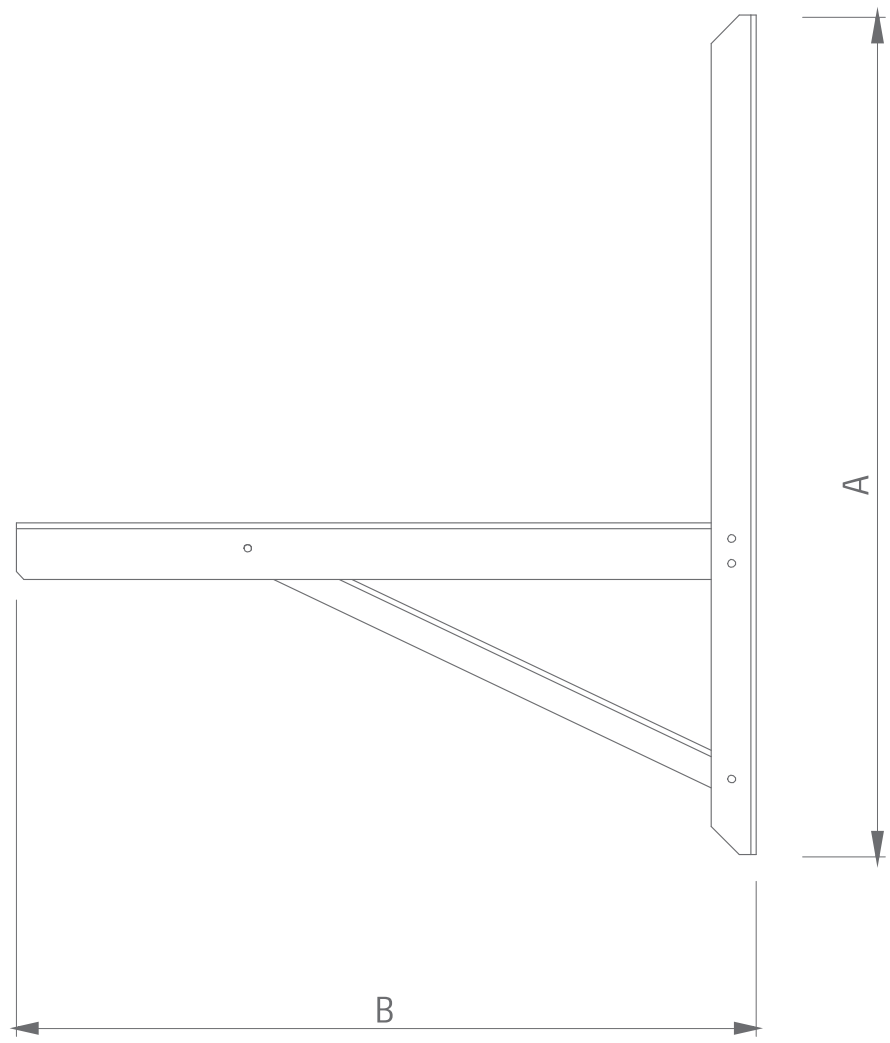

Housing group	Name	A	B	Slots
Z1andZ2	Bracket for conditioning unit (AE- Z1, Z2) 656 mm, painted sheet metal	744	656	ø9x20

Dimensions are expressed in millimetres (mm).

FLOOR STANDS

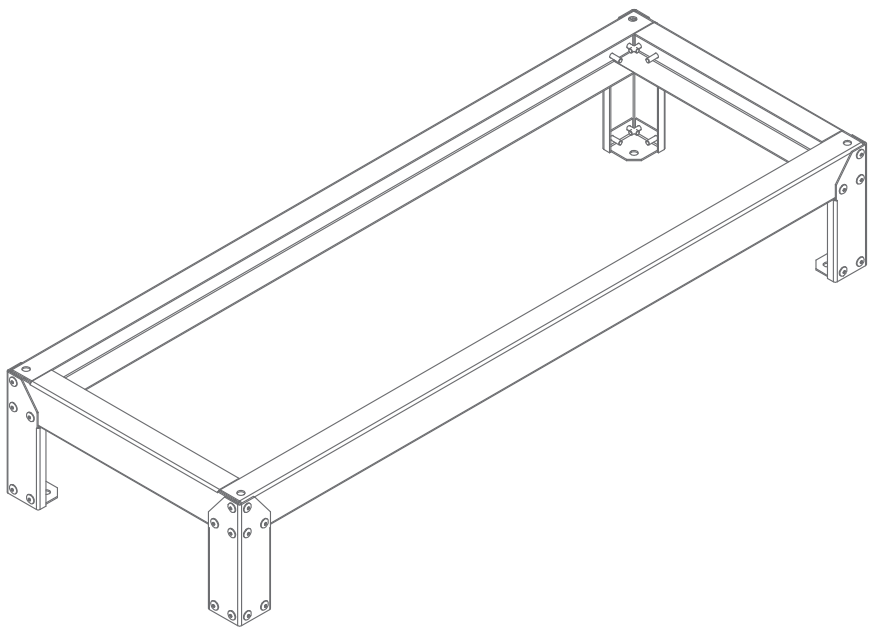

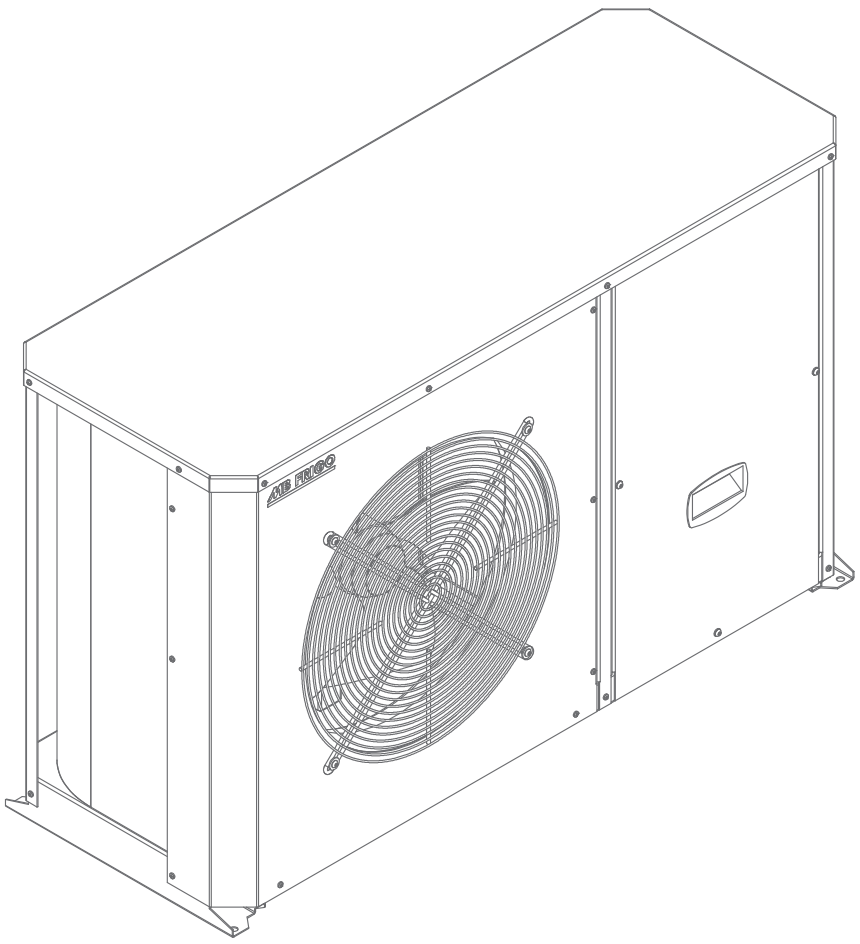

Housing group	A	B	C	D	E	F
Z1 i Z2	1098	361	200	1173	436	11

Dimensions are expressed in millimetres (mm).

ARCTIC AE

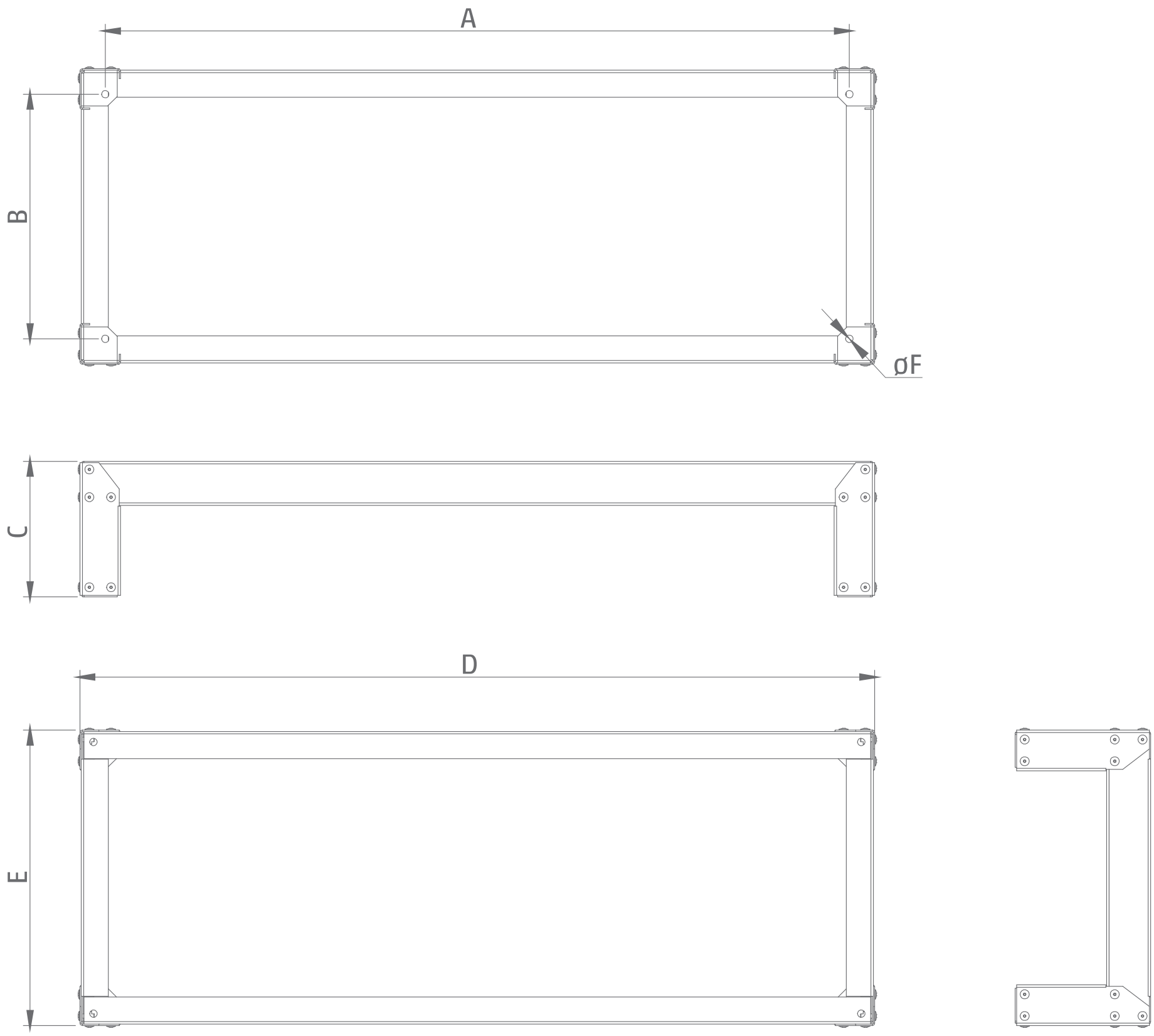

Dimensions are expressed in millimetres (mm).

ARCTIC AS

REFRIGERATION UNITS

ARCTIC AS

industrial refrigeration units

Arctic AS refrigeration units are the ideal solution for large-scale system in various industries. Arctic AS condensing units are equipped with semi-hermetic compressors that provide a high degree of serviceability. Easier on-site preparation thanks to floor stands or wall mounting brackets.

NOMENCLATURE:

AS — 5 RU 3P B 1.7 MT — XXXX

- AS – type
- 5 – housing group
- RU – Refrigeration unit
- 3P – 1P - single-phase connect. 3P - three-phase connect.
- B – compressor manufacturer (B - Bitzer)
- 1.7 – cooling capacity[1] [kW]
- MT – medium temp. pattern (LT - low temp. pattern)
- XXXX –
  - 0 - standard units
  - 1 - housing for outdoor application
  - 2 - power supply and protection
  - 3 - fan speed controller (instead of KP5)
  - 4 - oil separator with heater
  - 5 - liquid separator with heater[2]
  - 6 - ball valve LL

TABLE WITH OPTIONS

	EQUIPMENT	NOTE
BASIC EQUIPMENT	• semi-hermetic compressor with oil crankcase heater • air-cooled condenser with fan • liquid receiver • safety valve • filter-drier with sight glass • adjustable high/low pressure switch of the compressor • pressostatic regulation of condensation pressure • anti-vibration pipes on the suction and pressure pipelines	• when choosing the cooling unit in addition to its name please also specify the number of the option • e.g. unit AS - 5RU3PB1.7MT - 0; with standard units • e. g. unit AS - 5RU3PB1.7MT - 12; with housing for outdoor application, power supply and protection

OPTIONS	EQUIPMENT	NOTE
OPTION 1	• housing for outdoor application	• -
OPTION 2	• power supply and protection - compressor switch, el. heater, condenser fans, main switch	• -
OPTION 3	• fan speed controller	• the fan speed controller is installed and the pressure switch is removed from the standard equipment
OPTION 4	• oil separator with heater	• inspection glass on the oil return is installed only on units of design groups 6, 7 and 8
OPTION 5	• liquid separator with heater	• liquid separator installed only on units pertaining to housing group 8
OPTION 6	• ball valve LL	• ball valve on the liquid pipe

1 under the following conditions:
- MT Te/Ta = -10 C/+32 C
- LT Te/Ta = -30 C/+32 C
- superheat 10 K
- subcooling 2 K
- Te evaporation temperature
- Ta ambient temperature

2 only in the design group 8

REFRIGERATION UNITS outside the cold room

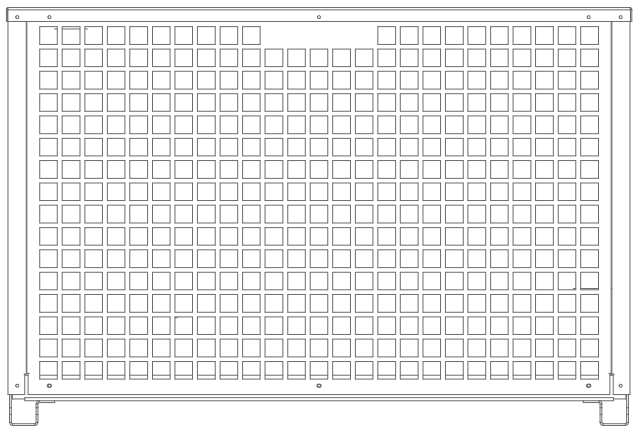

• design groups 5, 6 and 7

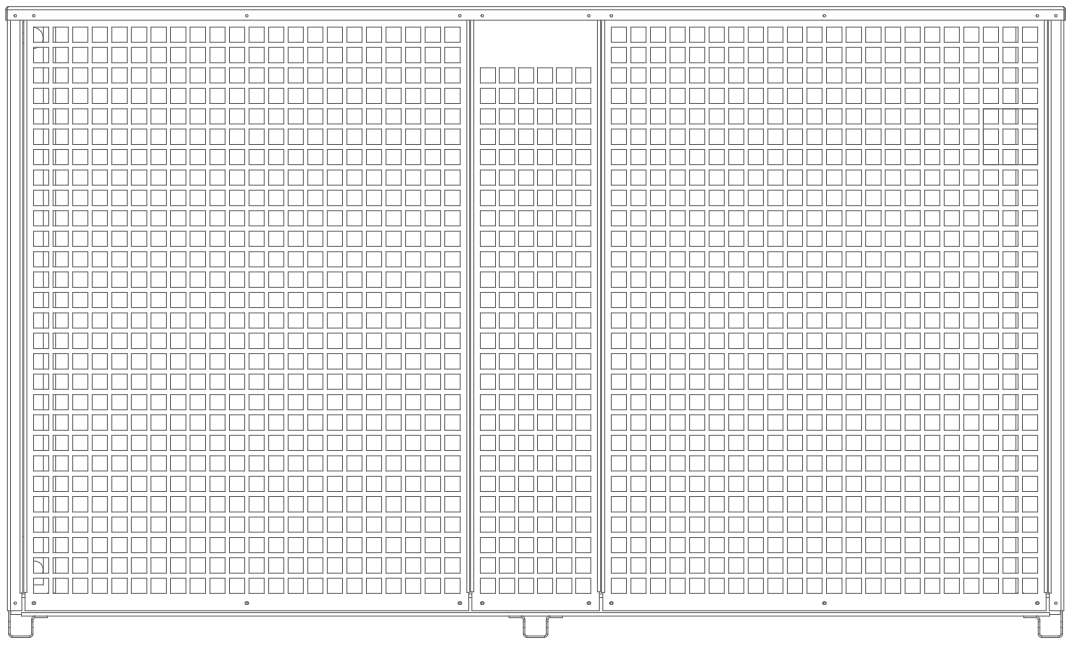

• design group 8

STANDARD UNITS

- semi-hermetic compressor with oil crankcase heater
- air-cooled condenser with fan
- liquid receiver
- safety valve
- filter-drier with sight glass
- adjustable high/low pressure switch of the compressor
- pressostatic regulation of condensation pressure
- anti-vibration pipes on the suction and pressure pipelines

FEATURES:

- short delivery terms
- simple installation
- anti-corrosion protection
- refrigerant with low GWP (GWP = 1397), R449A

ASSEMBLY ACCESSORIES:

- floor stands
- mounting brackets

ACCESSORIES (see table with options):

- housing for outdoor application
- power supply and protection
- fan speed controller
- oil separator with heater
- liquid separator with heater[2]
- ball valve with heater

2 only in the design group 8

COOLING CAPACITY:

Refrigeration unit MT MODEL	Condensing unit			
	Compressor	Cooling capacity [kW]	Connections	
		te/ta	ϕSL	ϕLL
		-10°C/+32°C		
AS - 5RU3PB1.7MT	2KES-05Y	1,7	16	10
AS - 6RU3PB2.3MT	2JES-07Y	2,3	16	10
AS - 6RU3PB2.9MT	2HES-2Y	2,9	16	10
AS - 6RU3PB3.4MT	2GES-2Y	3,4	16	10
AS - 7RU3PB4.4MT	2FES-3Y	4,4	16	10
AS - 7RU3PB5.4MT	2EES-3Y	5,4	22	10
AS - 7RU3PB6.3MT	2DES-3Y	6,3	22	12
AS - 7RU3PB8.1MT	2CES-4Y	8,1	22	12
AS - 8RU3PB8.8MT	4FES-5Y	8,8	22	12
AS - 8RU3PB11.1MT	4EES-6Y	11,1	28	16
AS - 8RU3PB12.6MT	4DES-7Y	12,6	28	16

Refrigeration unit LT MODEL	Condensing unit			
	Compressor	Cooling capacity [kW]	Connections	
		te/ta	ϕSL	ϕLL
		-30°C/+32°C		
AS - 5RU3PB0.9LT	2HES-1Y	0,9	16	10
AS - 5RU3PB1.0LT	2GES-2Y	1,0	16	10
AS - 5RU3PB1.3LT	2FES-2Y	1,3	16	10
AS - 6RU3PB1.7LT	2EES-2Y	1,7	22	10
AS - 6RU3PB2.0LT	2DES-2Y	2,0	22	10
AS - 6RU3PB2.7LT	2CES-3Y	2,7	22	10
AS - 7RU3PB2.9LT	4FES-3Y	2,9	22	10
AS - 7RU3PB3.6LT	4EES-4Y	3,6	28	10
AS - 7RU3PB4.1LT	4DES-5Y	4,1	28	10
AS - 7RU3PB5.4LT	4CES-6Y	5,4	28	10
AS - 8RU3PB6.5LT	4TES-9Y	6,5	35	12
AS - 8RU3PB6.9LT	4PES-12Y	6,9	35	12
AS - 8RU3PB8.8LT	4NES-14Y	8,8	35	12

- Te Evaporating temperature
- Ta ambient temperature
- Pmax maximum electrical power
- I max maximum electric current
- ø SL suction line
- ø LL liquid line

WORKING CONDITIONS:
- superheat 10K
- subcooling 2K

POWER SUPPLY:

Refrigeration unit MT MODEL	Condensing unit			
	Compressor	Power supply	Imax [A]	Pmax [kW]
AS - 5RU3PB1.7MT	2KES-05Y	400 V/3~/50 Hz	3.1	1.6
AS - 6RU3PB2.3MT	2JES-07Y	400 V/3~/50 Hz	4.1	2.0
AS - 6RU3PB2.9MT	2HES-2Y	400 V/3~/50 Hz	4.9	2.5
AS - 6RU3PB3.4MT	2GES-2Y	400 V/3~/50 Hz	5.7	2.9
AS - 7RU3PB4.4MT	2FES-3Y	400 V/3~/50 Hz	6.7	3.5
AS - 7RU3PB5.4MT	2EES-3Y	400 V/3~/50 Hz	8.1	3.9
AS - 7RU3PB6.3MT	2DES-3Y	400 V/3~/50 Hz	10.2	5.0
AS - 7RU3PB8.1MT	2CES-4Y	400 V/3~/50 Hz	11.6	6.0
AS - 8RU3PB8.8MT	4FES-5Y	400 V/3~/50 Hz	11.9	6.1
AS - 8RU3PB11.1MT	4EES-6Y	400 V/3~/50 Hz	14.7	7.9
AS - 8RU3PB12.6MT	4DES-7Y	400 V/3~/50 Hz	17.6	9.2

Refrigeration unit MT MODEL	Condensing unit			
	Compressor	Power supply	Imax [A]	Pmax [kW]
AS - 5RU3PB0.9LT	2HES-1Y	400 V/3~/50 Hz	4.1	2.1
AS - 5RU3PB1.0LT	2GES-2Y	400 V/3~/50 Hz	5.3	2.8
AS - 5RU3PB1.3LT	2FES-2Y	400 V/3~/50 Hz	5.6	3.0
AS - 6RU3PB1.7LT	2EES-2Y	400 V/3~/50 Hz	6.4	3.4
AS - 6RU3PB2.0LT	2DES-2Y	400 V/3~/50 Hz	7.9	4.1
AS - 6RU3PB2.7LT	2CES-3Y	400 V/3~/50 Hz	9.8	5.2
AS - 7RU3PB2.9LT	4FES-3Y	400 V/3~/50 Hz	10.2	5.5
AS - 7RU3PB3.6LT	4EES-4Y	400 V/3~/50 Hz	12.8	7.0
AS - 7RU3PB4.1LT	4DES-5Y	400 V/3~/50 Hz	15.1	8.2
AS - 7RU3PB5.4LT	4CES-6Y	400 V/3~/50 Hz	19.3	10.1
AS - 8RU3PB6.5LT	4TES-9Y	400 V/3~/50 Hz	21.5	13.4
AS - 8RU3PB6.9LT	4PES-12Y	400 V/3~/50 Hz	23.8	14.3
AS - 8RU3PB8.8LT	4NES-14Y	400 V/3~/50 Hz	29.7	17.7

- Te evaporation temperature
- Ta ambient temperature
- Pmax maximum electrical power
- Imax maximum electric current
- ø SL suction line
- ø LL liquid line

OPERATING CONDITIONS:
- superheat 10K
- subcooling 2K

CONDENSING UNIT • design groups 5, 6 and 7

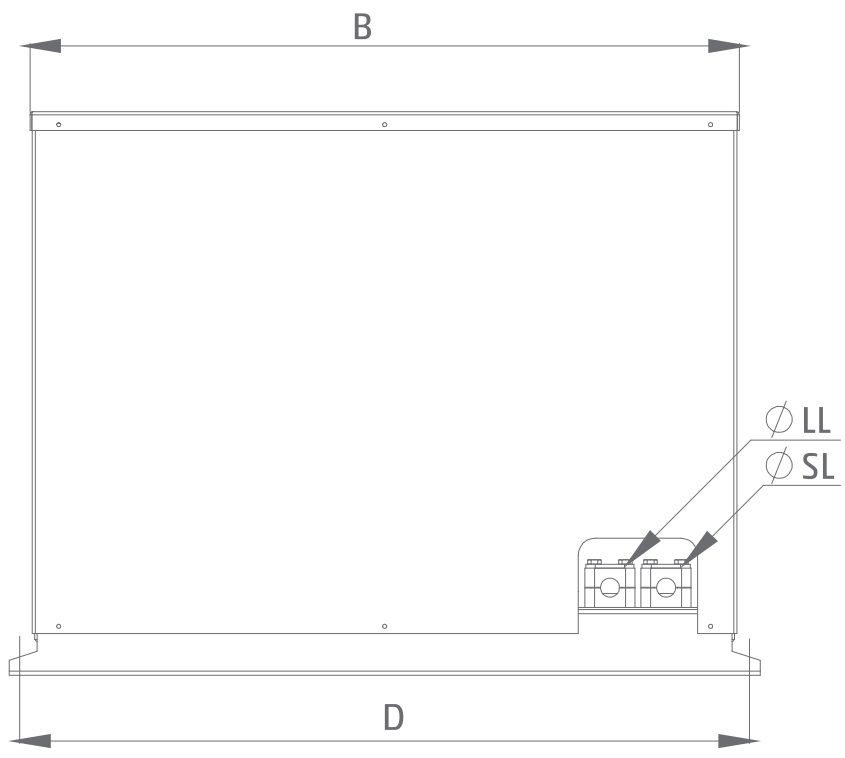

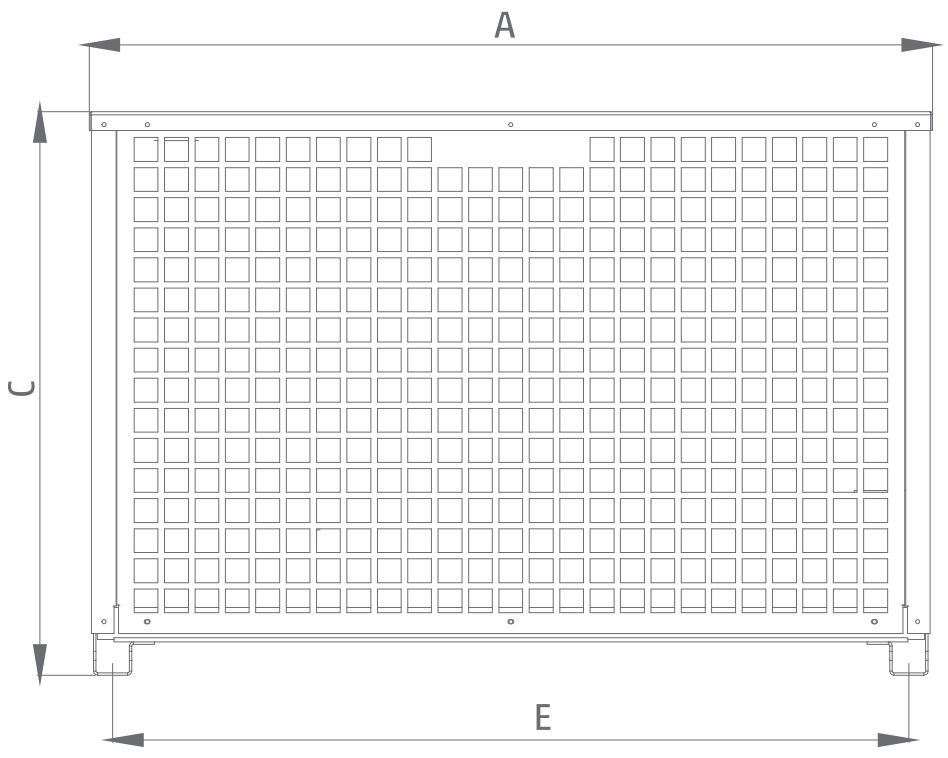

Refrigeration unit MT MODEL	Dimensions [mm]					Weight[4]
	A	B	C	D	E	[kg]
AS - 5RU3PB1.7MT	707.5	595	473	612	668	105
AS - 6RU3PB2.3MT	807.5	705	573	722	768	115
AS - 6RU3PB2.9MT	807.5	705	573	722	768	117
AS - 6RU3PB3.4MT	807.5	705	573	722	768	117
AS - 7RU3PB4.4MT	1001.5	865	673	882	962	143
AS - 7RU3PB5.4MT	1001.5	865	673	882	962	176
AS - 7RU3PB6.3MT	1001.5	865	673	882	962	176
AS - 7RU3PB8.1MT	1001.5	865	673	882	962	185

Refrigeration unit LT MODEL	Dimensions [mm]					Weight[4]
	A	B	C	D	E	[kg]
AS - 5RU3PB0.9LT	707.5	595	473	612	668	106
AS - 5RU3PB1.0LT	707.5	595	473	612	668	106
AS - 5RU3PB1.3LT	707.5	595	473	612	668	107
AS - 6RU3PB1.7LT	807.5	705	573	722	768	140
AS - 6RU3PB2.0LT	807.5	705	573	722	768	140
AS - 6RU3PB2.7LT	807.5	705	573	722	768	143
AS - 7RU3PB2.9LT	1001.5	865	673	882	962	180
AS - 7RU3PB3.6LT	1001.5	865	673	882	962	180
AS - 7RU3PB4.1LT	1001.5	865	673	882	962	180
AS - 7RU3PB5.4LT	1001.5	865	673	882	962	185

4 Units weights include protective housing, power supply and protection. Weights are approximate and are subject to change.

REFRIGERATION UNIT

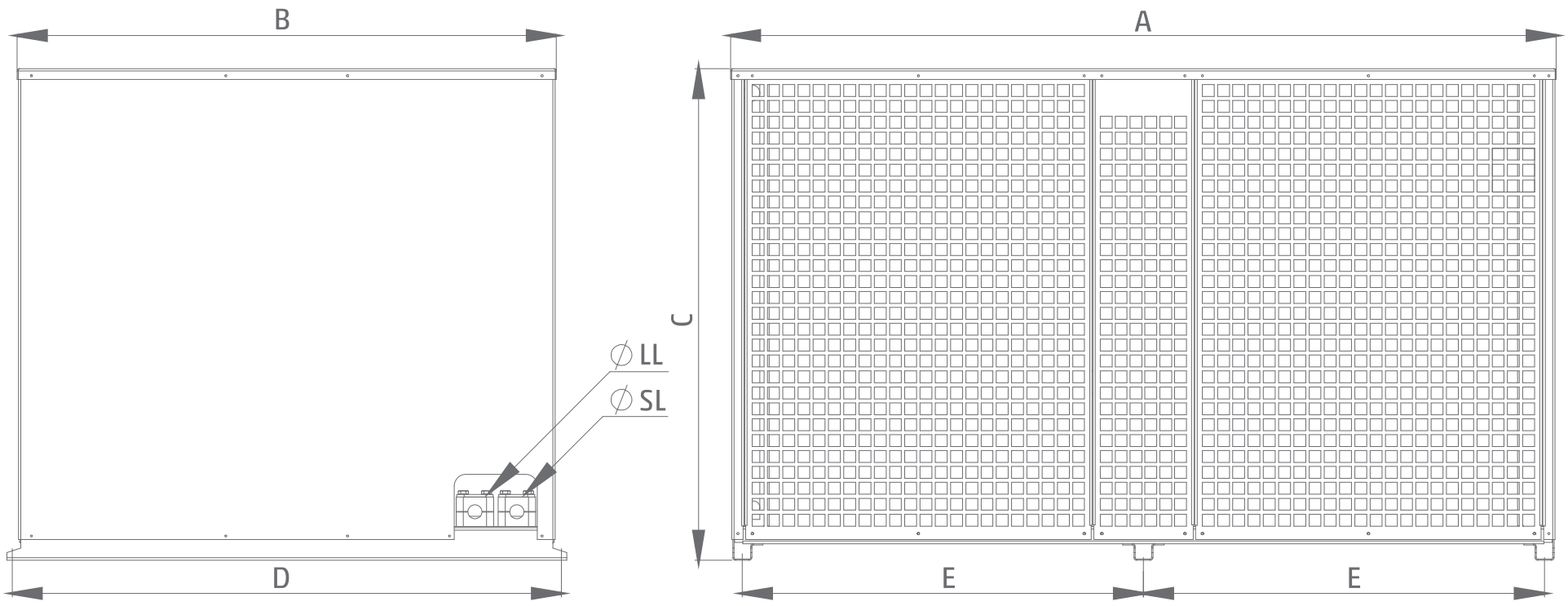

Refrigeration unit MT MODEL	Dimensions [mm]					Weight[4]
	A	B	C	D	E	[kg]
AS - 8RU3PB8.8MT	1390.5	908	828	925	676	281
AS - 8RU3PB11.1MT	1390.5	908	828	925	676	281
AS - 8RU3PB12.6MT	1390.5	908	828	925	676	284

Refrigeration unit LT MODEL	Dimensions [mm]					Weight[4]
	A	B	C	D	E	[kg]
AS - 8RU3PB6.5LT	1390.5	908	828	925	676	329
AS - 8RU3PB6.9LT	1390.5	908	828	925	676	334
AS - 8RU3PB8.8LT	1390.5	908	828	925	676	336

4 Units weight includes protective housing, power supply and protection. Weights are approximate and are subject to change.

ARCTIC AS

FLOOR BRACKETS • design groups 5, 6 and 7

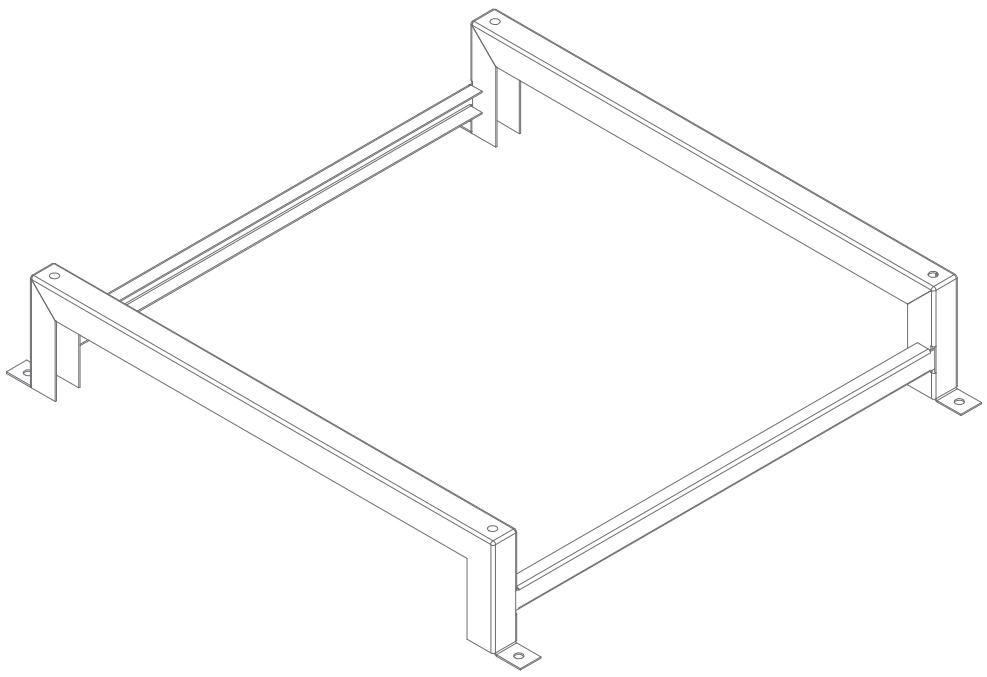

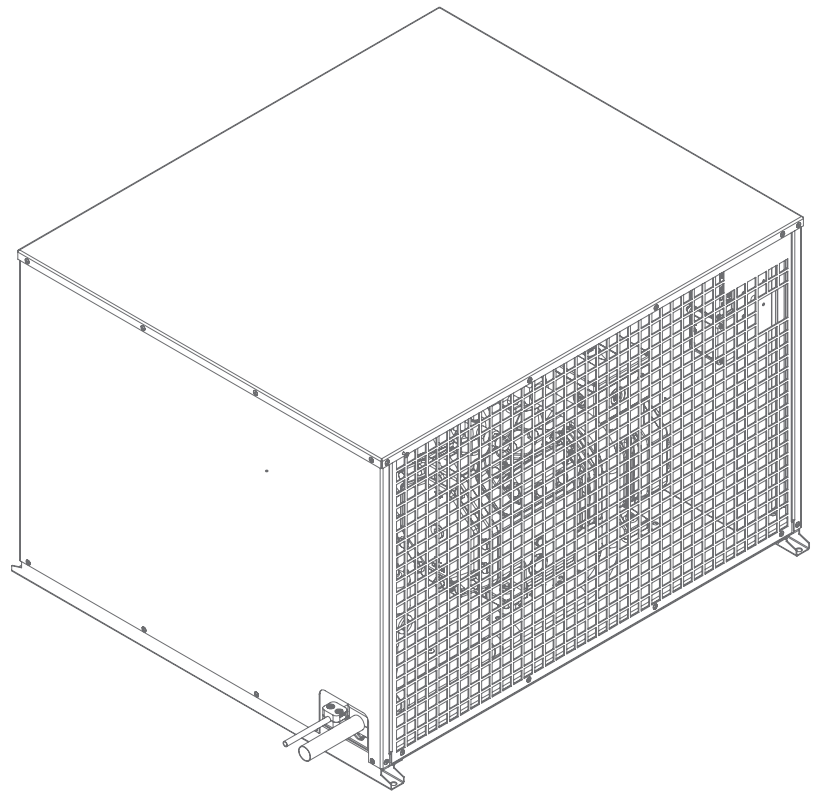

Housing group	A	B	C	D	E	F	G	H
5	708	784	710	748	612	672	11	150
6	808	884	780	748	722	742	11	150
7	1002	1078	920	1042	882	882	11	150

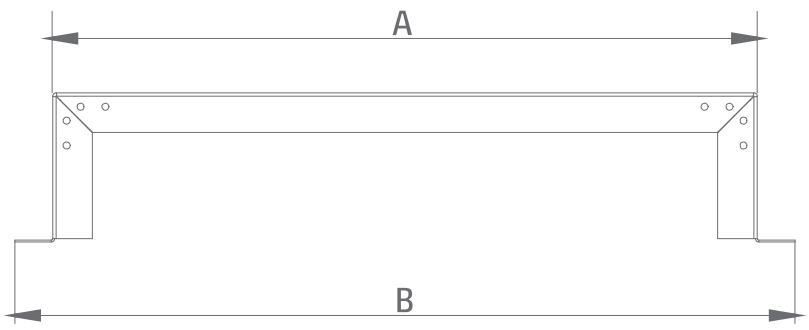

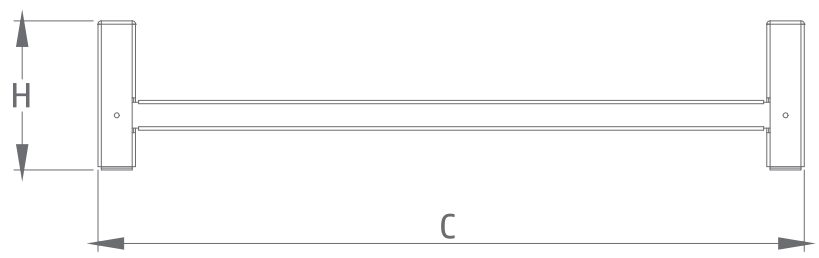

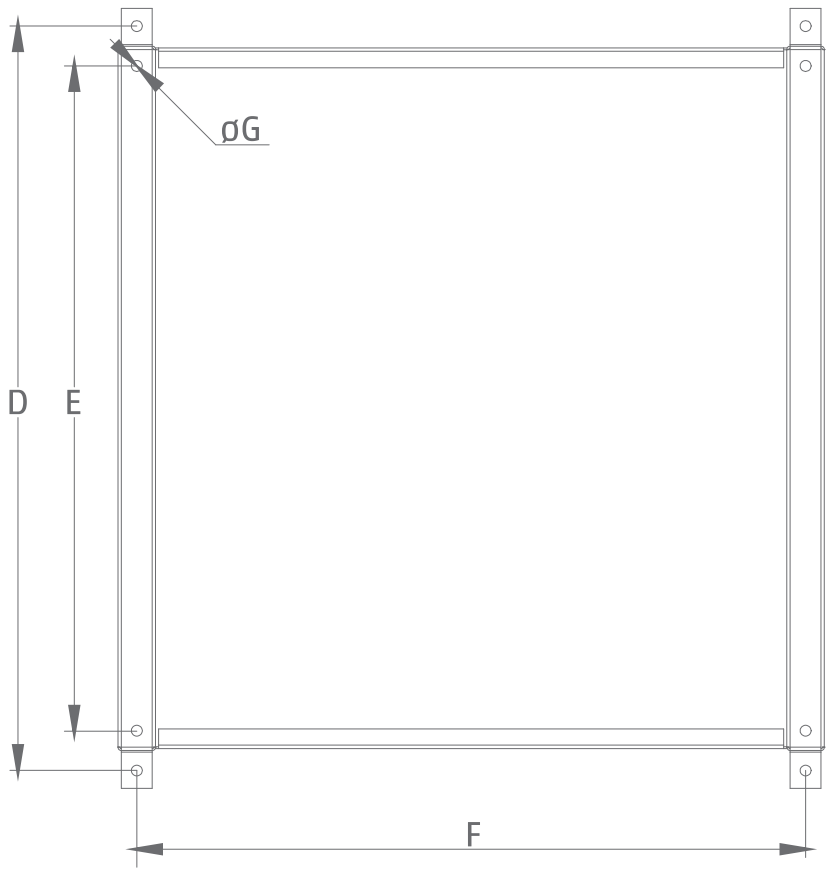

FLOOR STANDS • design group 8

housing group	A	B	C	D	E	F	G	H
8	1391	1467	963	1431	676	925	11	150

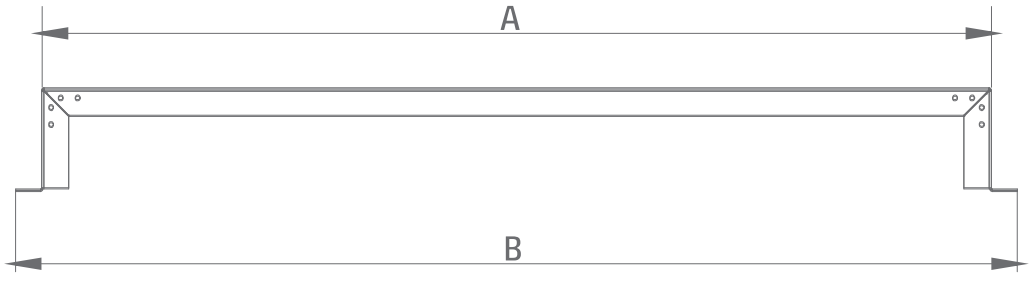

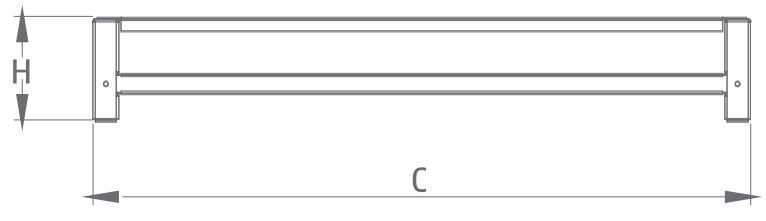

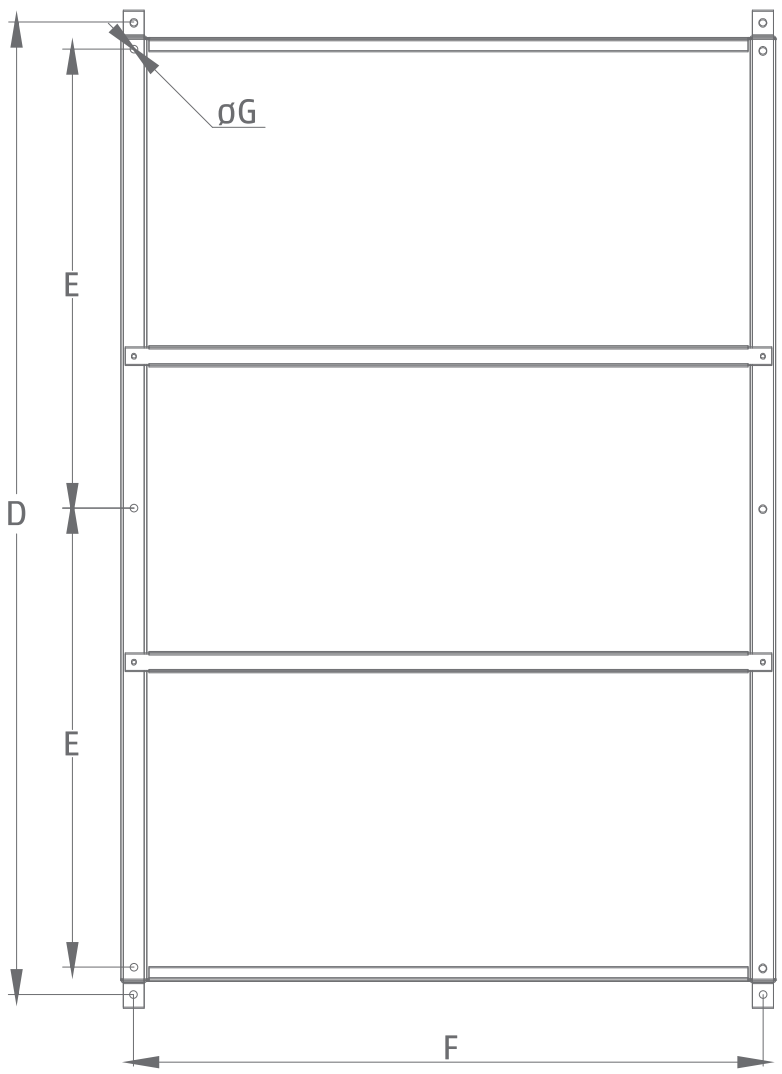

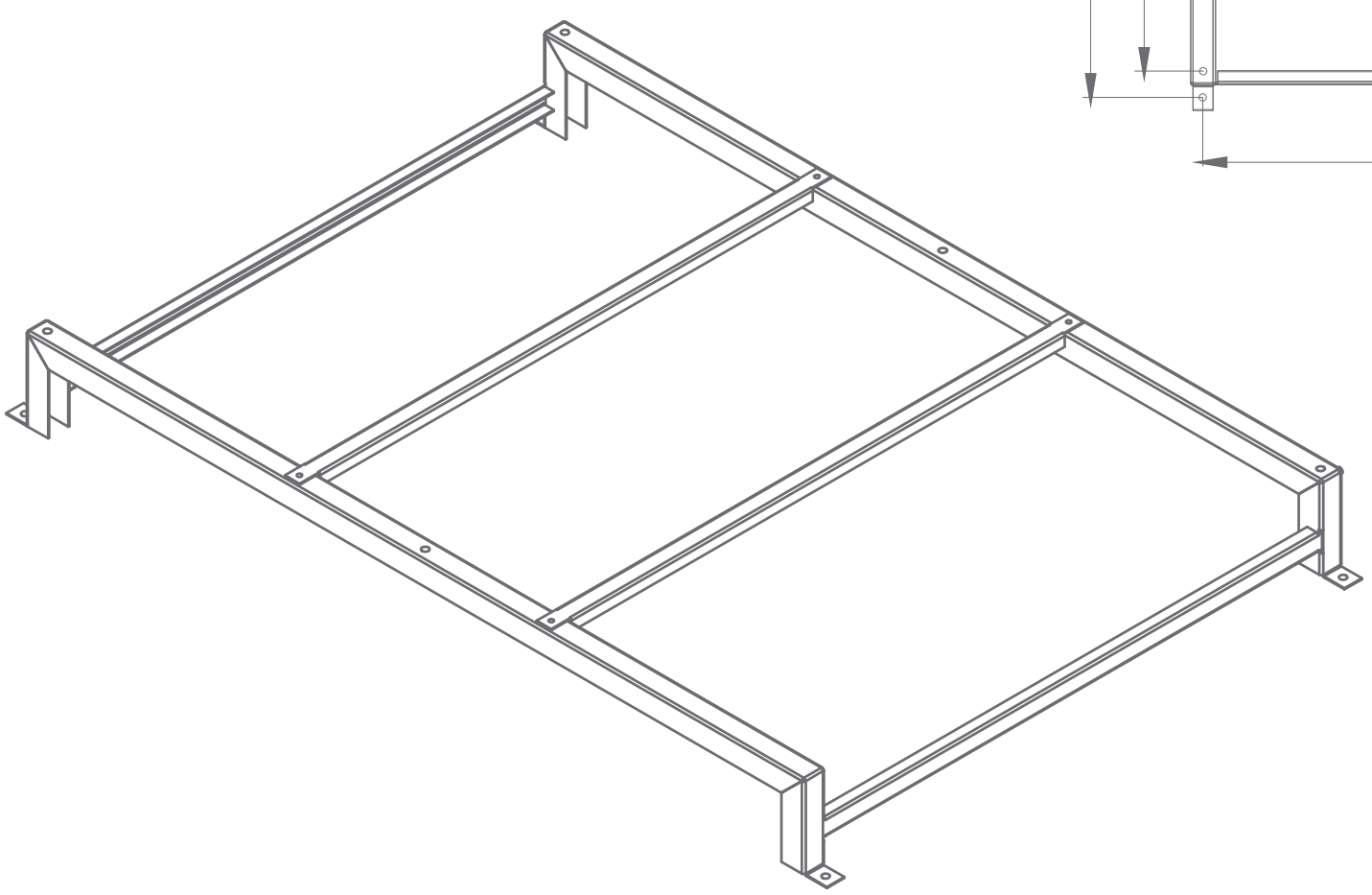

ARCTIC AS

MOUNTING BRACKETS

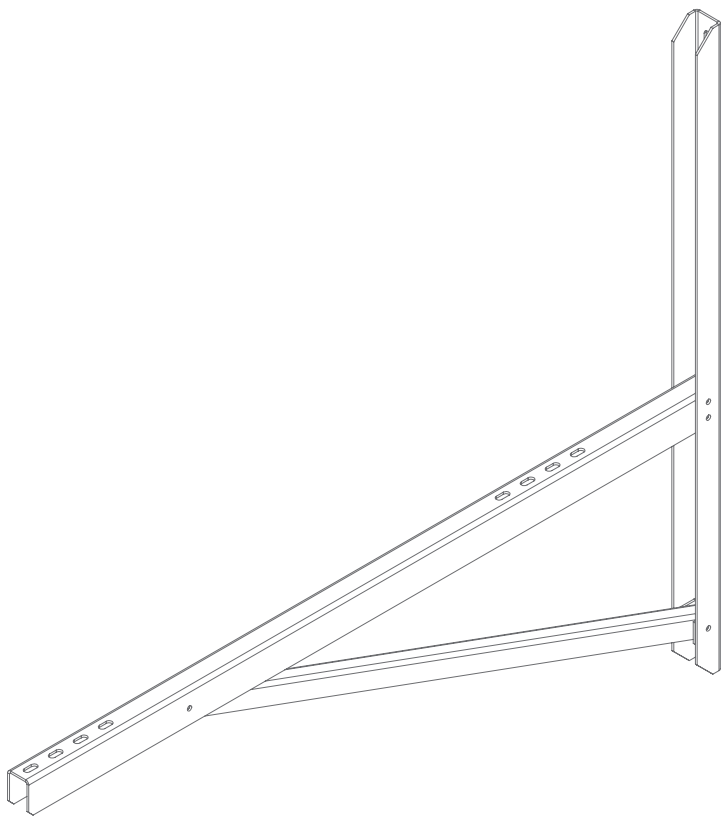

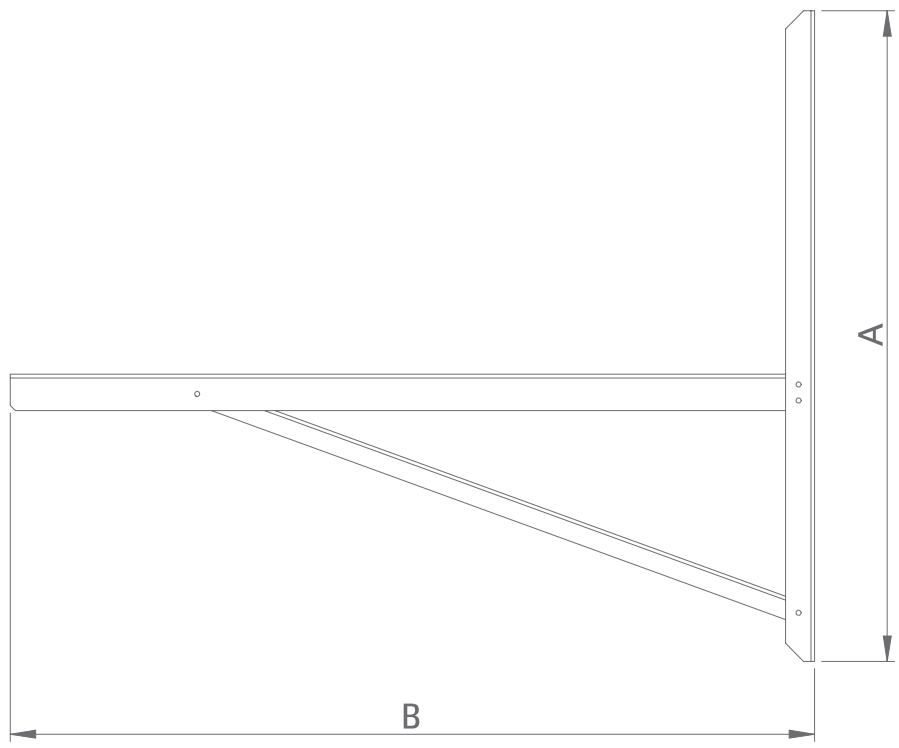

Housing group	Name	A	B	Slots
5	Wall bracket 800	800	806	ø9x20
5 and 6	Wall bracket 1000	874	1006	ø9x20
6 and 7	Wall bracket 1100	895	1106	ø9x20

Dimensions are expressed in millimeters (mm).

SLOT LAYOUT FOR MOUNTING BRACKETS

MOUNTING BRACKETS for design group 5

- MOUNTING BRACKETS 17931

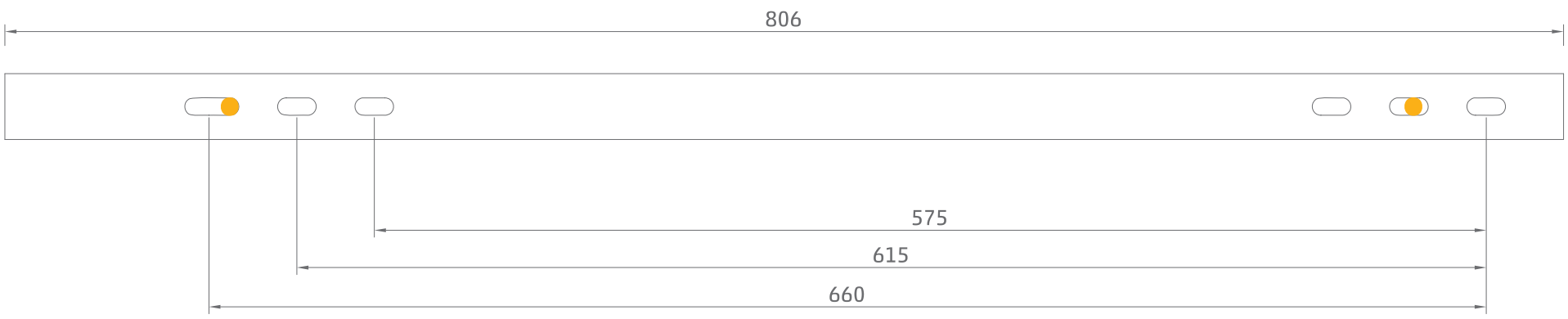

MOUNTING BRACKETS for design groups 5 and 6

- MOUNTING BRACKETS 32818

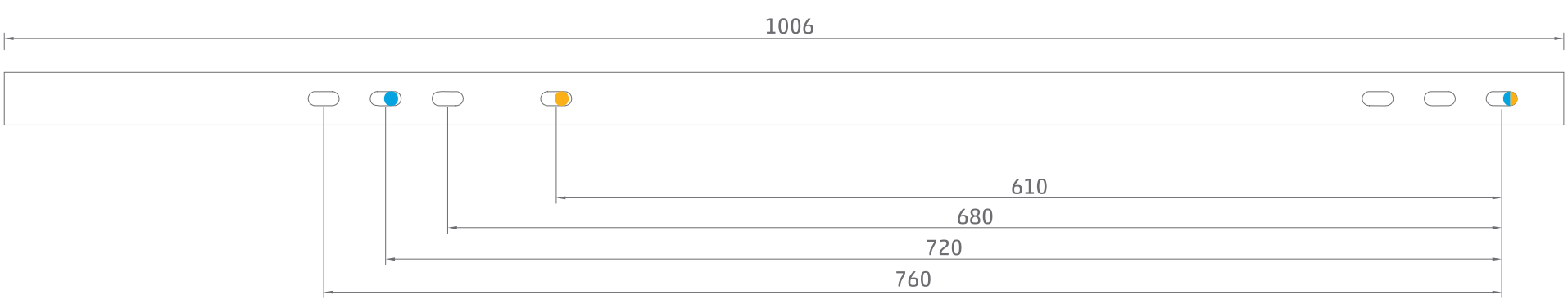

ARCTIC AS

MOUNTING BRACKETS for design groups 6 and 7

- MOUNTING BRACKETS 33049

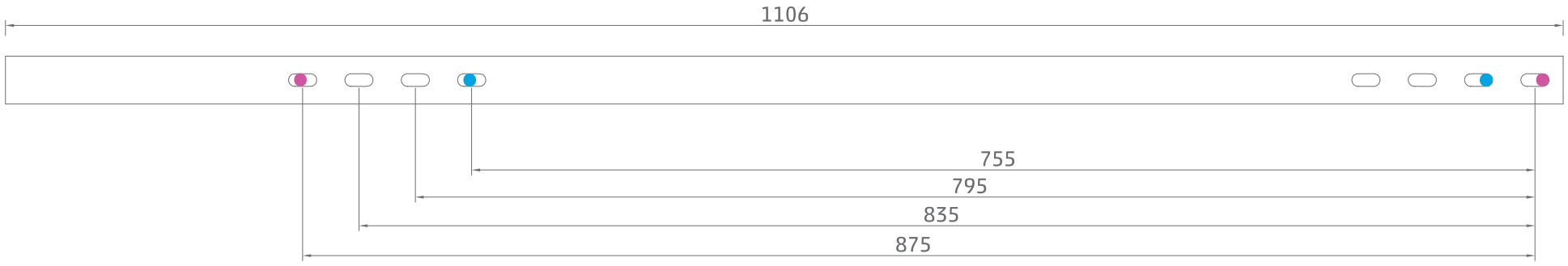

- housing group 5
- housing group 6
- housing group 7

Dimensions are expressed in millimeters (mm).

ARCTIC AC

COMPRESSOR UNITS

ARCTIC AC

industrial compressor units

Arctic AC compressor units are the ideal solution for large-scale system for various industries. Arctic AC compressor units are equipped with semi-hermetic compressors that provide a high degree of serviceability.

NOMENCLATURE:

AC – H1 RU 3P B 8.8 MT – XXXX

- AC – type
- H1 – Housing group
- RU – Refrigeration unit
- 3P – 1P- single-phase connection; 3P- three-phase connection
- B – compressor manufacturer (B- Bitzer)
- 8.8 – cooling capacity[1] [kW]
- MT – medium temp. pattern (LT- low temp. pattern
- XXXX –
  - 0- standard unit
  - 1- housing for outdoor application
  - 2- electrical cabinet
  - 3- contin. regulation of condensation pressure
  - 4- stepwise regulation of condensation pressure
  - 5- oil separator with heater
  - 6- liquid separator with heater
  - 7- ball valves (CL and LL)

TABLE WITH OPTIONS

	EQUIPMENT	NOTE
BASIC EQUIPMENT	• semi-hermetic compressor with oil crankcase heater • liquid receiver • safety valve up to 28 bar • filter-drier with slight glass • adjustable high/low pressure switch of the compressor • stepwise regulation of condensation pressure • pressostatic oil pressure regulation[2] • anti-vibration pipes • cooling fan for the compressor head (LT models only)	• when choosing a cooling unit in addition to its name please also specify the number of the option. • e.g. unit AC- H1RU3PB8.8MT- 0; standard unit • e.g. unit AC- H1KU3PB8.8MT- 12; with housing for outdoor application • and power supply and protection.

OPTIONS	EQUIPMENT	NOTE
OPTION 1	• protective housing	• -
OPTION 2	• power supply and protection-compressor switch, el. heater, condenser fans, main switch	• power distribution cabinet
OPTION 3	• continuous regulation of condensation pressure	• Danfoss XGE 4C I is installed. • speed regulator regulates the pressure of the condenser • for MBF condensers only • See table with explanations on p. 6.
OPTION 4	• oil separator with heater	• -
OPTION 5	• liquid separator with heater	• -
OPTION 6	• ball valves CL and LL	• Ball valve on condensation and liquid piping
OPTION 7	• non-return valve on the pressure side of the compressor	• -

1 under the following conditions:
- MT Te/Ta = -10 C/+32 C
- LT Te/Ta = -30 C/+32 C
- superheat 10 K
- subcooling 2 K

COMPRESSOR UNIT outside the cold room

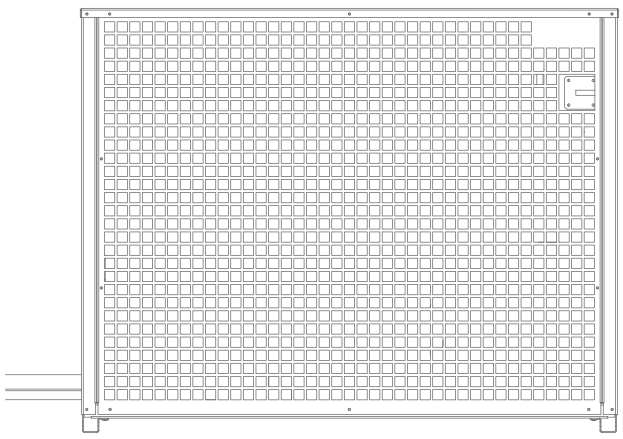

• design group H1

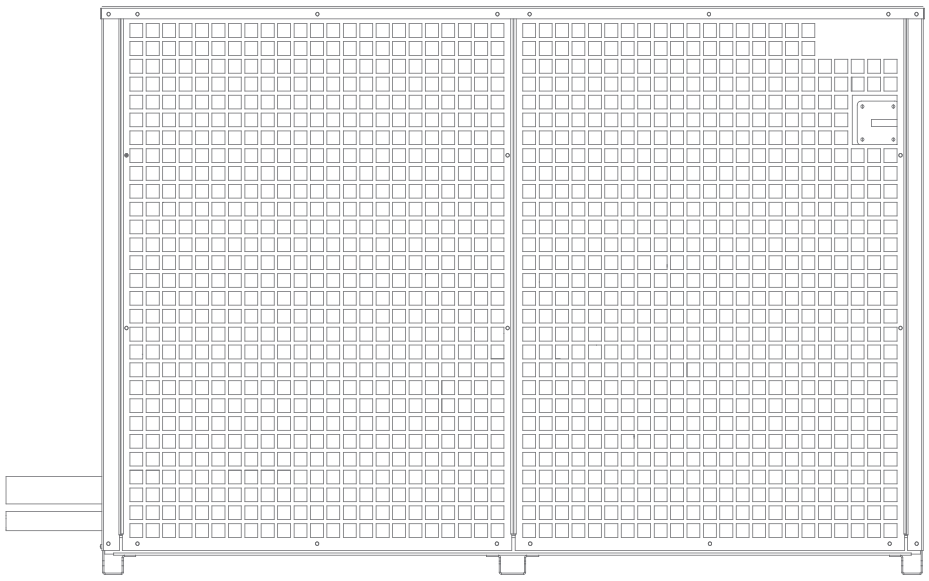

• design group H2

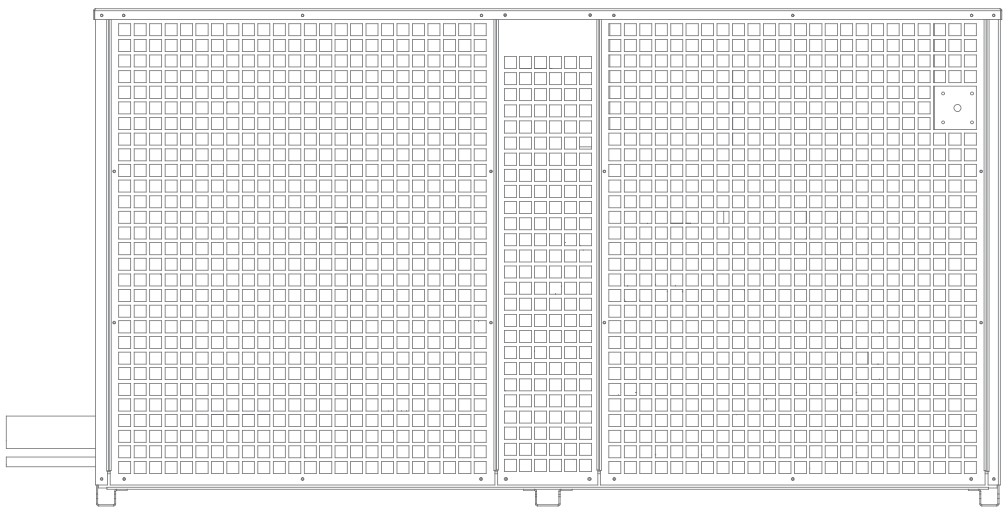

• design group H3

STANDARD UNIT

- semi-hermetic compressor with oil crankcase heater
- liquid receiver
- safety valve up to 28 bar
- filter-drier with slight glass
- adjustable protective pressure switch of the HP/LP compressor
- pressostatic regulation of oil pressure[2]
- antivibration pipes on pressure and suction
- cooling fan for the compressor's head (LT models only)

FEATURES:

- designed with anti-corrosion protection
- refrigerant with low GWP (GWP = 1397), R449A

ASSEMBLY ACCESSORIES:

- floor stands
- mounting brackets

ACCESSORIES (see table with options):

- housing for outdoor application
- electrical cabinet
- continuous regulation of condensation pressure
- oil separator with heater
- liquid separator with heater
- ball valves (CL and LL)
- non-return valve on the pressure side of the compressor

COOLING CAPACITY:

•R449A

Compressor unit MT MODEL	Compressor	Cooling capacity [kW] te/ta -10°C/+32°C	-5°C/+32°C	0°C/+32°C	Connections Evaporator ϕSL	ϕLL	Connections Condenser ϕDL	ϕCL
AC-H1RU3PB8.8MT	4FES-5Y	8,8	10,8	13,4	22	12	16	16
AC-H1RU3PB11.1MT	4EES-6Y	11,1	13,5	16,8	28	12	16	16
AC-H1RU3PB12.6MT	4DES-7Y	12,6	15,4	19,2	28	16	22	18
AC-H1RU3PB16.1MT	4CES-9Y	16,1	19,6	24,4	28	16	22	18
AC-H2RU3PB16.6MT	4VES-10Y	16,6	20,3	25,5	28	16	22	18
AC-H2RU3PB20.1MT	4TES-12Y	20,1	24,6	30,8	35	16	28	18
AC-H2RU3PB22.8MT	4PES-15Y	22,8	27,9	35,2	42	16	28	22
AC-H2RU3PB27.5MT	4NES-20Y	27,5	33,6	42,0	42	22	28	22

Compressor unit MT MODEL	Compressor	Cooling capacity [kW] te/ta -35°C/+32°C	-30°C/+32°C	-25°C/+32°C	Connections Evaporator ϕSL	ϕLL	Connections Condenser ϕDL	ϕCL
AC-H1RU3PB3.6LT	4EES-4Y	2,4	3,6	4,7	22	10	12	12
AC-H1RU3PB4.1LT	4DES-5Y	2,7	4,1	5,4	22	10	12	12
AC-H1RU3PB5.4LT	4CES-6Y	3,6	5,4	7,0	28	10	12	12
AC-H2RU3PB6.5LT	4TES-9Y	4,2	6,5	8,5	28	10	16	12
AC-H2RU3PB6.9LT	4PES-12Y	4,3	6,9	9,3	35	10	16	12
AC-H2RU3PB8.8LT	4NES-14Y	5,7	8,8	11,5	35	12	16	16
AC-H3RU3PB10.6LT[2]	4JE-15Y[2]	7,0	10,6	13,9	42	12	18	16
AC-H3U3PB12.8LT[2]	4HE-18Y[2]	8,6	12,8	16,62	42	16	18	18
AC-H3U3PB15.4LT[2]	4GE-23Y[2]	10,6	15,4	19,72	54	16	22	18

•Te Evaporating temperature
•Ta ambient temperature
• PMAX maximum electrical power
• IMAX maximum electric current
• ø SL suction pipe
• ø LL liquid pipe

WORKING CONDITIONS:
• superheat 10K
• subcooling 2K

POWER SUPPLY:

Compressor unit MT MODEL	Compressor unit			
	Compressor	Power supply	Imax [A]	Pmax [kW]
AC-H1RU3PB8.8MT	4FES-5Y	400 V/3~/50 Hz	10,8	5,8
AC-H1RU3PB11.1MT	4EES-6Y	400 V/3~/50 Hz	13,6	7,6
AC-H1RU3PB12.6MT	4DES-7Y	400 V/3~/50 Hz	16,5	8,9
AC-H1RU3PB16.1MT	4CES-9Y	400 V/3~/50 Hz	20,2	11,3
AC-H2RU3PB16.6MT	4VES-10Y	400 V/3~/50 Hz	19,9	12,0
AC-H2RU3PB20.1MT	4TES-12Y	400 V/3~/50 Hz	25,1	14,0
AC-H2RU3PB22.8MT	4PES-15Y	400 V/3~/50 Hz	28,2	16,0
AC-H2RU3PB27.5MT	4NES-20Y	400 V/3~/50 Hz	33,2	19,0

Compressor unit MT MODEL	Compressor unit			
	Compressor	Power supply	Imax [A]	Pmax [kW]
AC-H1RU3PB3.6LT	4EES-4Y	400 V/3~/50 Hz	12,2	6,9
AC-H1RU3PB4.1LT	4DES-5Y	400 V/3~/50 Hz	14,5	8,1
AC-H1RU3PB5.4LT	4CES-6Y	400 V/3~/50 Hz	17,7	9,7
AC-H2RU3PB6.5LT	4TES-9Y	400 V/3~/50 Hz	19,9	13,0
AC-H2RU3PB6.9LT	4PES-12Y	400 V/3~/50 Hz	22,7	14,0
AC-H2RU3PB8.8LT	4NES-14Y	400 V/3~/50 Hz	26,6	17,0
AC-H3RU3PB10.6LT[2]	4JE-15Y[2]	400 V/3~/50 Hz	30,8	19,0
AC-H3U3PB12.8LT[2]	4HE-18Y[2]	400 V/3~/50 Hz	36,7	22
AC-H3U3PB15.4LT[2]	4GE-23Y[2]	400 V/3~/50 Hz	43,9	27

- Te evaporation temperature
- Ta ambient temperature
- Pmax maximum electrical power
- Imax maximum electric current
- ø SL suction line
- ø LL liquid line

WORKING CONDITIONS:
- superheat 10K
- subcooling 2K

OPTION 3 - Continuous regulation of condensation pressure:

It is used when an MBF condenser is delivered with the system, and the desired regulation of the condensation pressure is continuous using the speed regulator. The table lists the units and paired MBF condensers according to which the operating speed is installed and the appropriate electrical preparation is carried out. Option 3 does NOT include the condenser in the "package".

MT MODEL	Condenser	Speed reg. no.	LT MODEL	Condenser	Speed reg. no.
AC-H1RU3PB8.8MT	MBF 08	2	AC-H1RU3PB3.6LT	MBF 07	1
AC-H1RU3PB11.1MT	MBF 08	2	AC-H1RU3PB4.1LT	MBF 07	1
AC-H1RU3PB12.6MT	MBF 08	2	AC-H1RU3PB5.4LT	MBF 07	1
AC-H1RU3PB16.1MT	MBF 08	2	AC-H2RU3PB6.5LT	MBF 07	1
AC-H2RU3PB16.6MT	MBF 08	2	AC-H2RU3PB6.9LT	MBF 08	2
AC-H2RU3PB20.1MT	MBF 09	2	AC-H2RU3PB8.8LT	MBF 08	2
AC-H2RU3PB22.8MT	MBF 10	3	AC-H3RU3PB10.6LT[2]	MBF 08	2
AC-H2RU3PB27.5MT	MBF 10	3	AC-H3U3PB12.8LT[2]	MBF 08	2
-	-	-	AC-H3U3PB15.4LT[2]	MBF 09	2

MBF CAPACITORS OUTPUTS TABLE

Check the MBF condensers capacity raiting in the following table.

Arctic AC compressor units come with a safety valve of up to 28 bar. It is not possible to fill the unit with, e.g. R134 without modifying the device (replacing the safety valve and adjusting the parameters of the protective pressure switches).

MODEL	dT	R134a	R404A	R407F	R452A	R449A	Fan	Fans no.
	K	kW	kW	kW	kW	kW		
MBF 07	10	7,9	-	-	8,6	8,9	S6E450-AM13-50	1
	11	8,7	8,7	9,8	9,5	9,8		
	12	9,6	9,5	10,7	10,4	10,6		
MBF 07	10	11,5	-	-	12,2	12,5	S4E450-AU03-01	1
	11	12,4	12,5	14	13,9	13,8		
	12	14	13,7	15,3	14,6	15,1		
MBF 08	10	15,5	-	-	16,6	17,1	S6E450-AM13-50	2
	11	17,1	16,8	19	18,3	18,8		
	12	18,7	18,4	20,7	20	20,6		
MBF 08	10	22,1	-	-	23,2	24	S4E450-AU03-01	2
	11	24,5	23,8	26,8	25,6	26,4		
	12	27	26,2	29,3	28	28,9		
MBF 09	10	25,3	24,8	28,2	27,1	28	S6E500-AJ05-01	2
	11	27,9	27,5	31	29,9	30,8		
	12	30,6	30,2	33,8	32,6	33,6		
MBF 10	10	37,3	36,7	41,6	40	41,3	S6E500-AJ05-01	3
	11	41,2	40,7	45,8	44,1	45,4		
	12	45,2	44,6	49,9	48,1	49,5		

COMPRESSOR UNIT outside the cold room

Arctic AC compressor units are placed on a base (with housing) in three housing groups. Each design group is divided into two subgroups. The subgroup "a" is used when, as an option, the compressor unit is not equipped with a liquid separator. The subgroup "b" is used when the unit is equipped with a liquid

HOUSING GROUP H1

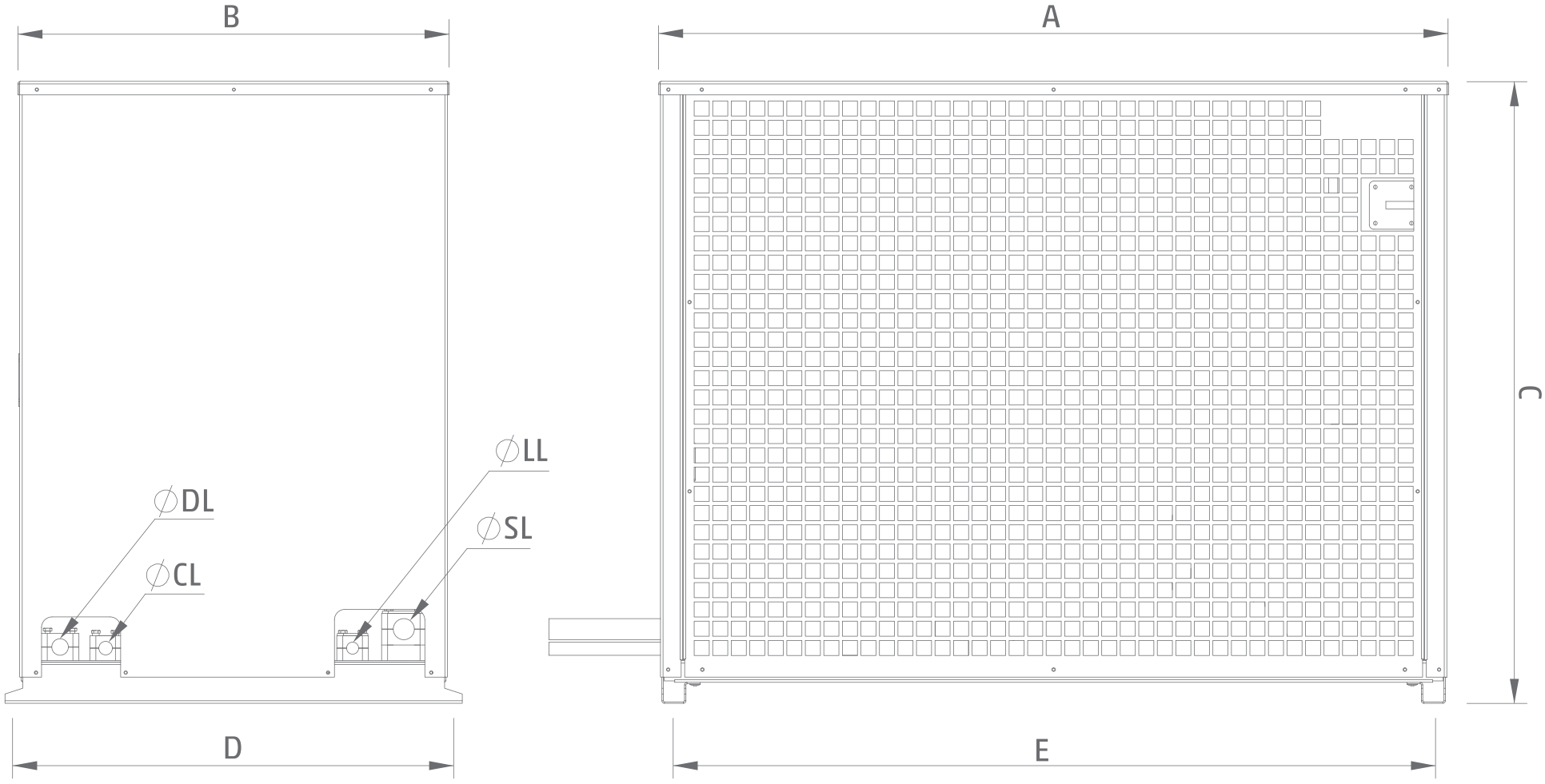

Compressor unit MT MODEL	Subgroup	Dimensions [mm]					Weight[4]
		A	B	C	D	E	[kg]
AC-H1RU3PB8.8MT	a	1049	573	827	589	1008	-
	b	1133	612	827	629	1093	-
AC-H1RU3PB11.1MT	a	1049	573	827	589	1008	-
	b	1133	612	827	629	1093	-
AC-H1RU3PB12.6MT	a	1049	573	827	589	1008	-
	b	1133	612	827	629	1093	-
AC-H1RU3PB16.1MT	a	1049	573	827	589	1008	-
	b	1133	612	827	629	1093	-

Compressor unit MT MODEL	Subgroup	Dimensions [mm]					Weight[4]
		A	B	C	D	E	[kg]
AC-H1RU3PB3.6LT	a	1049	573	827	589	1008	-
	b	1133	612	827	629	1093	-
AC-H1RU3PB4.1LT	a	1049	573	827	589	1008	-
	b	1133	612	827	629	1093	-
AC-H1RU3PB5.4LT	a	1049	573	827	589	1008	-
	b	1133	612	827	629	1093	-

4 Units weights include protective housing, power supply and protection.

HOUSING GROUP H2

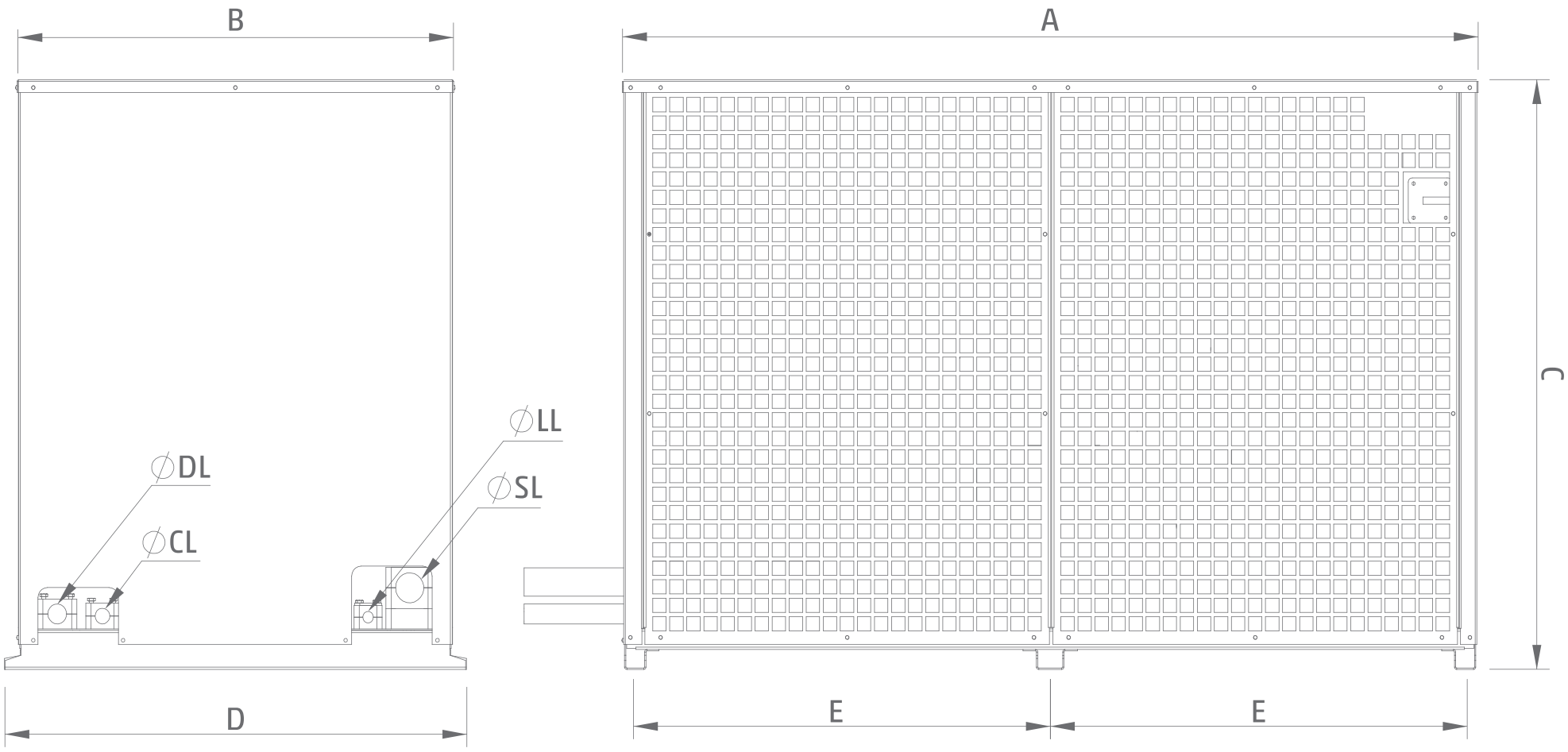

Compressor unit MT MODEL	subgroup	Dimensions [mm]					Weight[4]
		A	B	C	D	E	[kg]
AC-H2RU3PB16.6MT	a	1277	651	827	669	619	-
	b	1410	765	827	779	684	-
AC-H2RU3PB20.1MT	a	1277	651	827	669	619	-
	b	1410	765	827	779	684	-
AC-H2RU3PB22.8MT	a	1277	651	827	669	619	265
	b	1410	765	827	779	684	295
AC-H2RU3PB27.5MT	a	1277	651	827	669	619	265
	b	1410	765	827	779	684	-

Compressor unit MT MODEL	subgroup	Dimensions [mm]					Weight[4]
		A	B	C	D	E	[kg]
AC-H2RU3PB6.5LT	a	1277	651	827	669	619	-
	b	1410	765	827	779	684	-
AC-H2RU3PB6.9LT	a	1277	651	827	669	619	-
	b	1410	765	827	779	684	-
AC-H2RU3PB8.8LT	a	1277	651	827	669	619	-
	b	1410	765	827	779	684	-

4 Units weights include protective housing, power supply and protection.

HOUSING GROUP H3

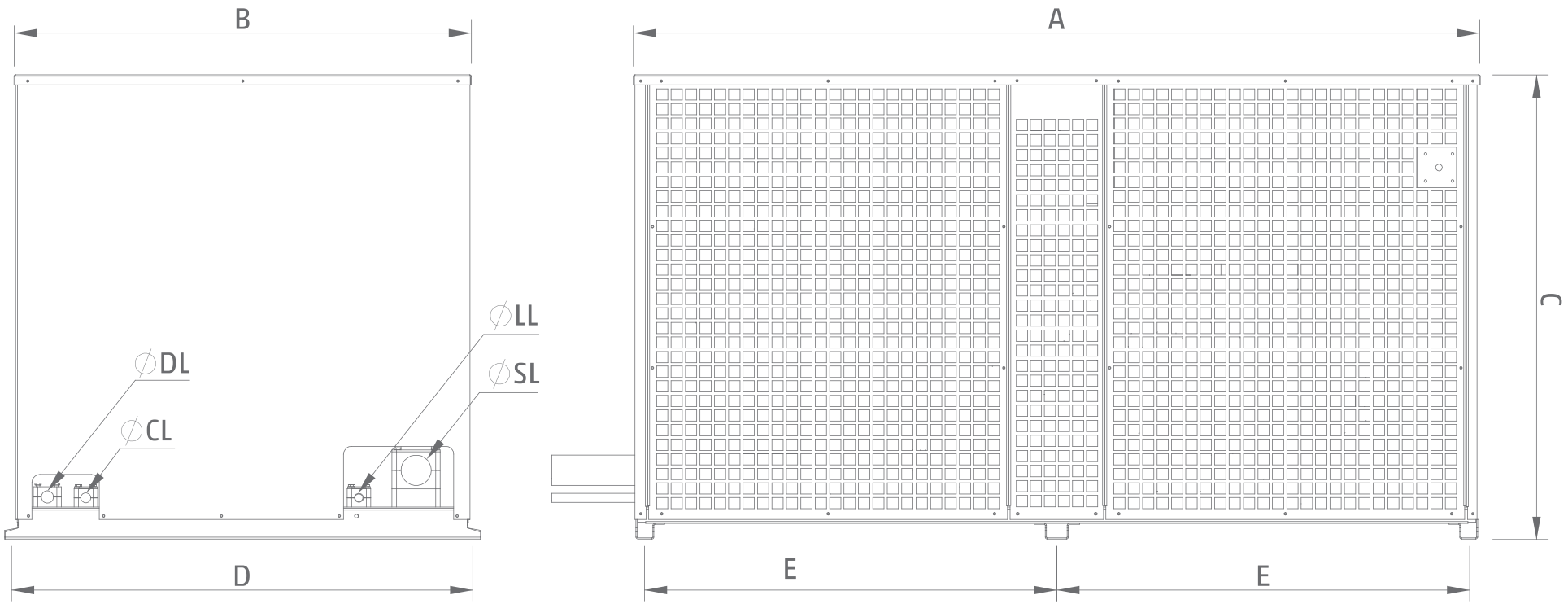

Compressor unit MT MODEL	subgroup	Dimensions [mm]					Weight[4]
		A	B	C	D	E	[kg]
AC-H3RU3PB10.6LT	a	1410	765	827	779	684	-
	b	1510	816	827	829	734	-
AC-H3U3PB12.8LT	a	1410	765	827	779	684	-
	b	1510	816	827	829	734	-
AC-H3U3PB15.4LT	a	1410	765	827	779	684	-
	b	1510	816	827	829	734	-

4 Units weights include protective housing, power supply and protection.

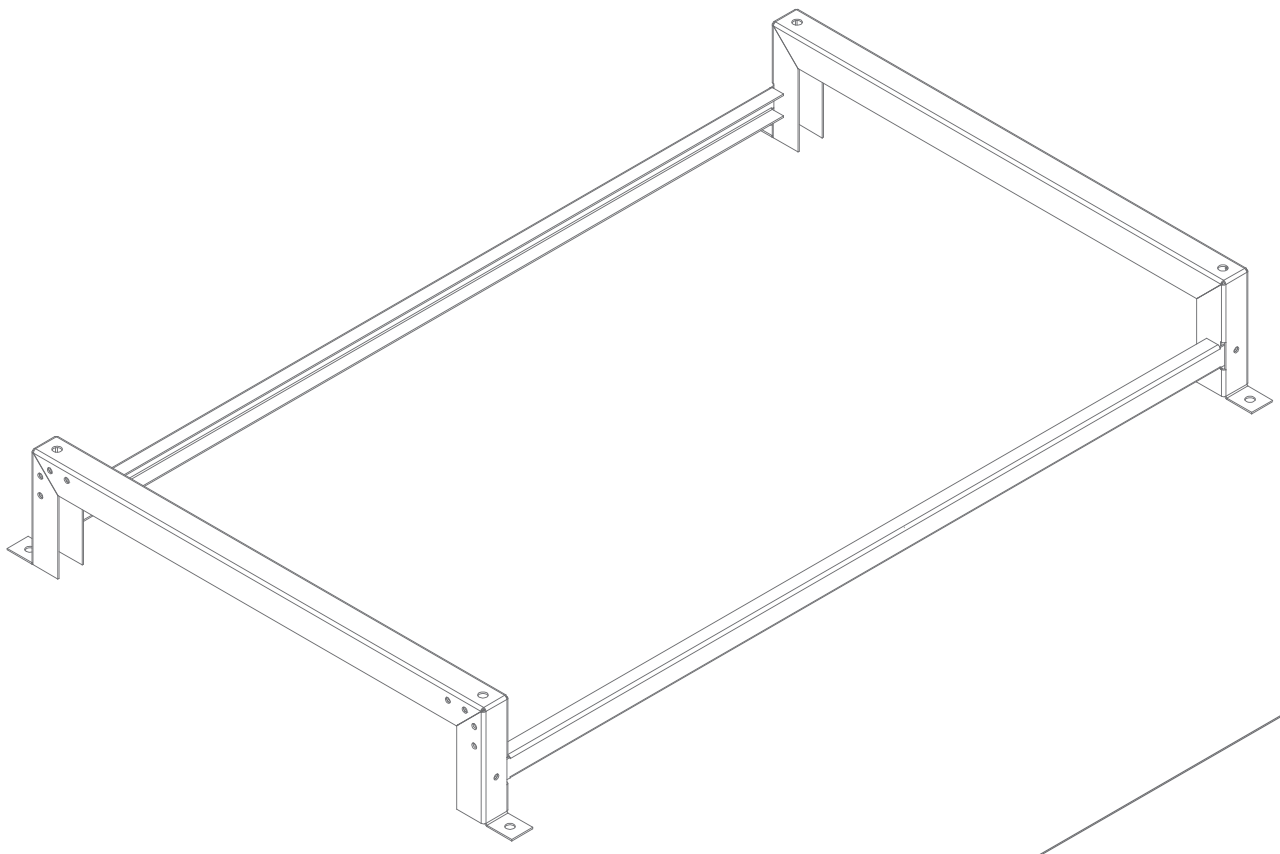

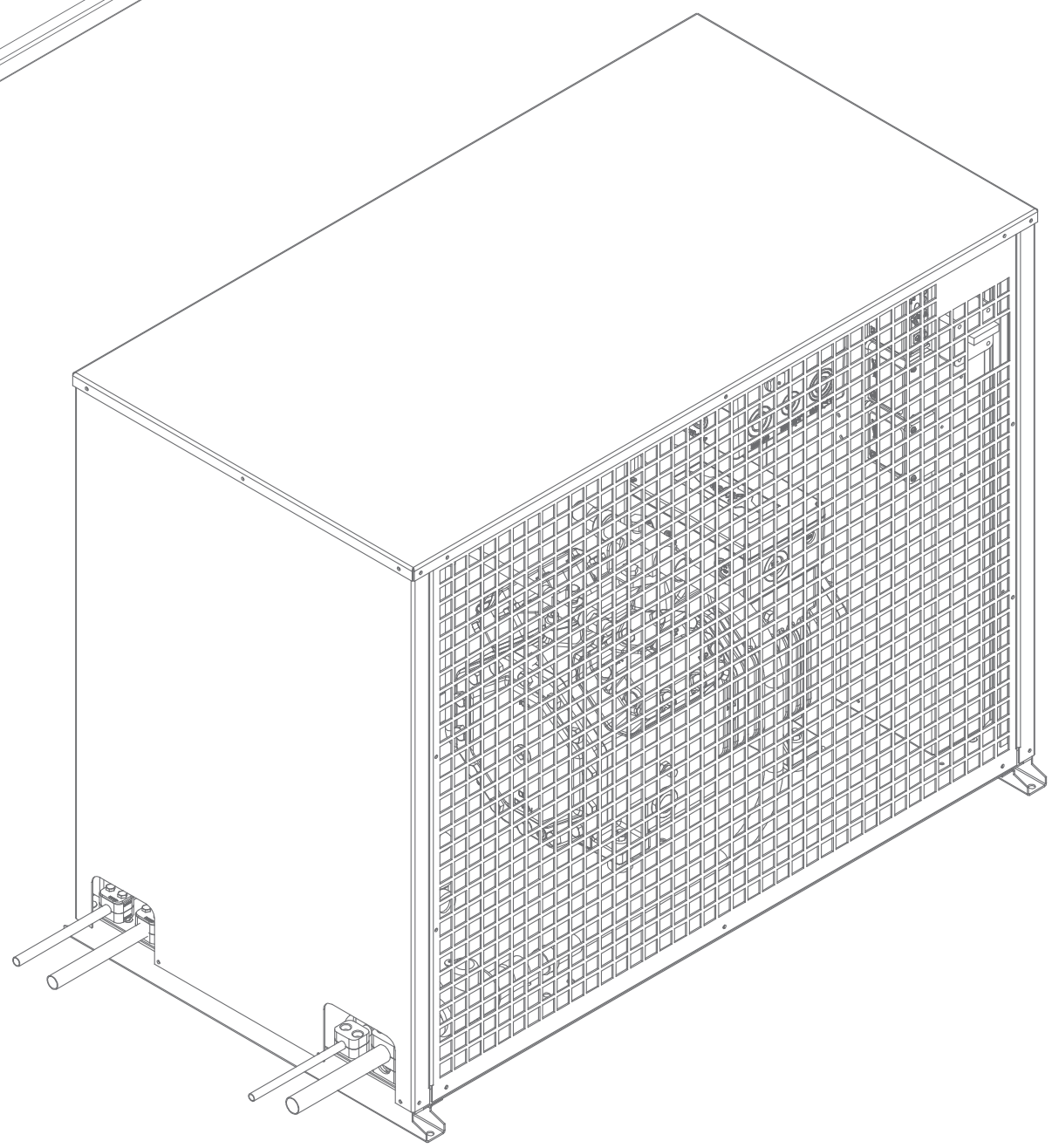

Housing group	Subgroup	A	B	C	D	E	F	G	H
H1	a	629	705	1046	669	589	1008	11	150
	b	669	745	1131	709	629	1093	11	150

Dimensions are expressed in millimeters

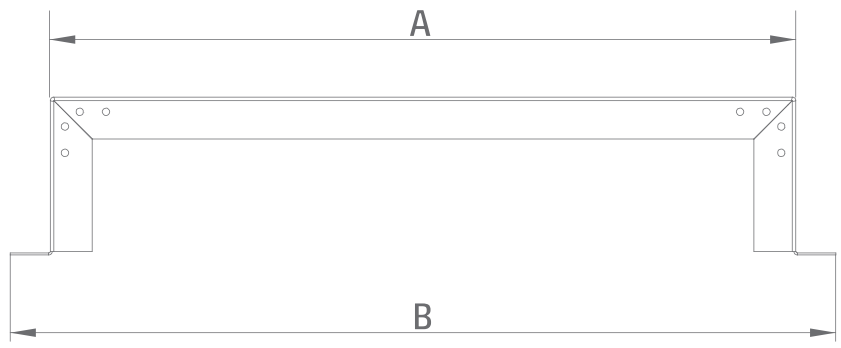

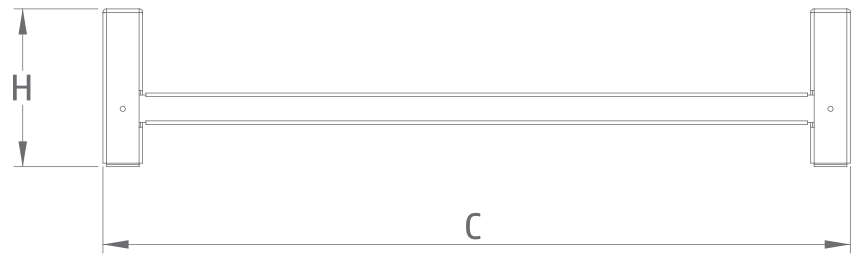

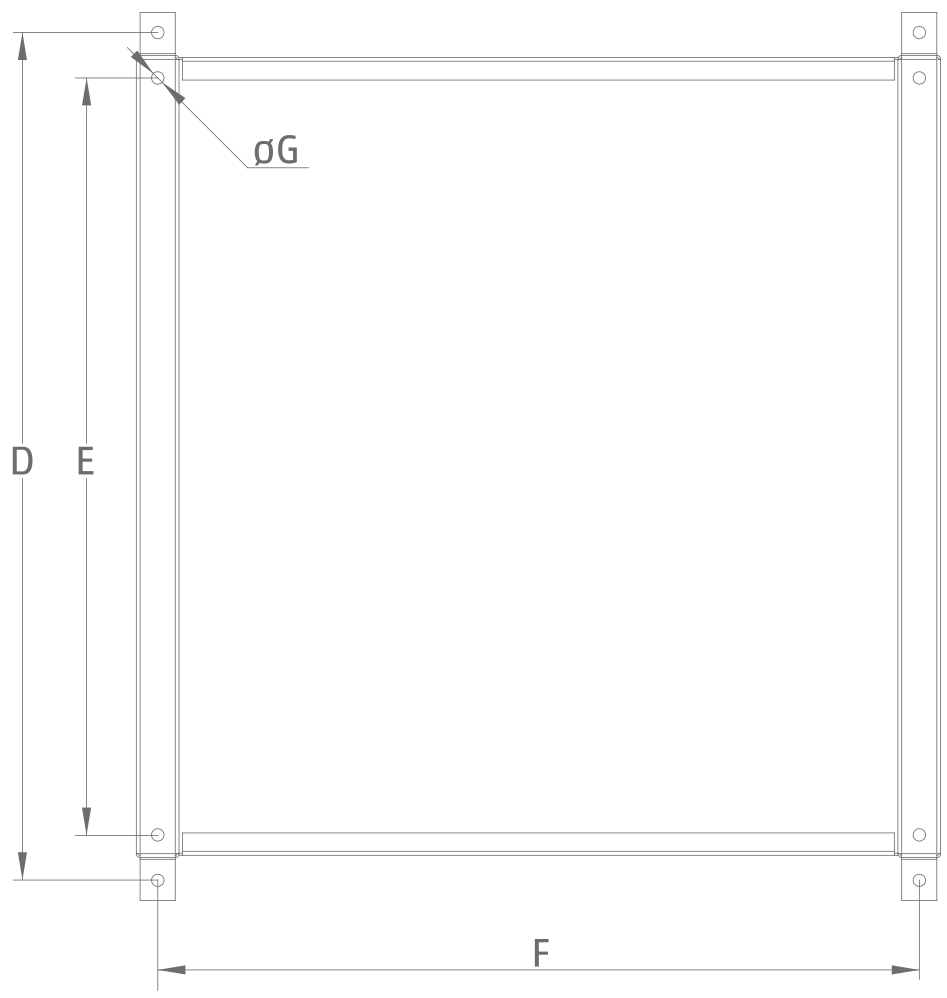

Dimensions are expressed in millimeters

FLOOR STANDS

Housing group	Subgroup	A	B	C	D	E	F	G	H
H2	a	1278	1354	707	1318	619	619	11	150
	b	1408	1484	817	1448	684	779	11	150
H3	a	1408	1484	817	1448	684	779	11	150
	b	1508	1584	867	1548	734	829	11	150

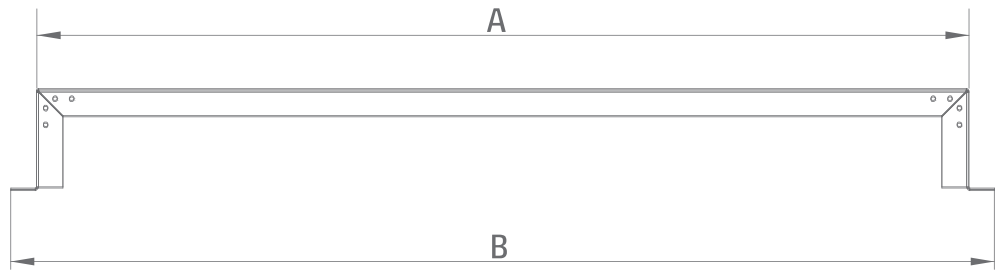

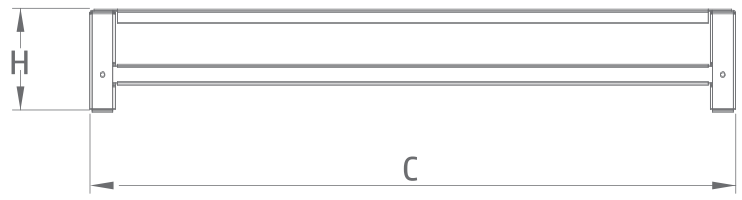

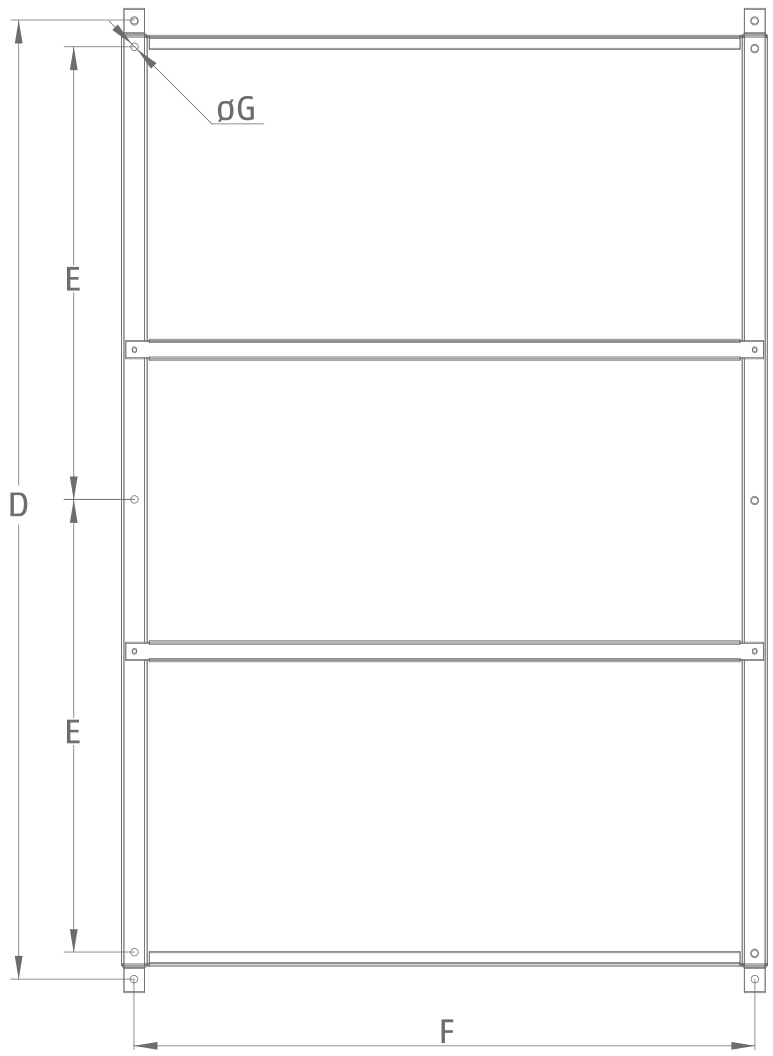

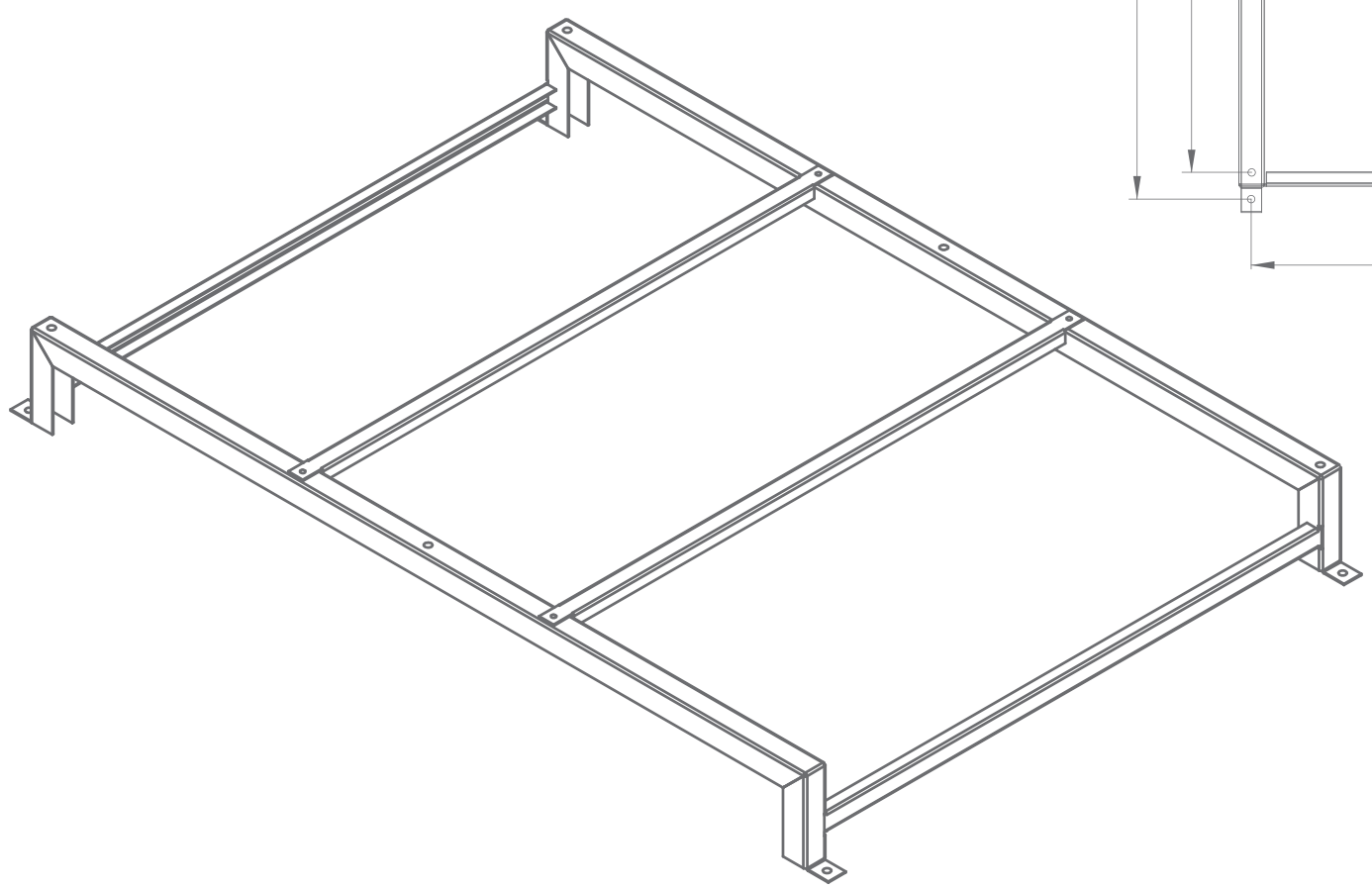

Dimensions are expressed in millimeters

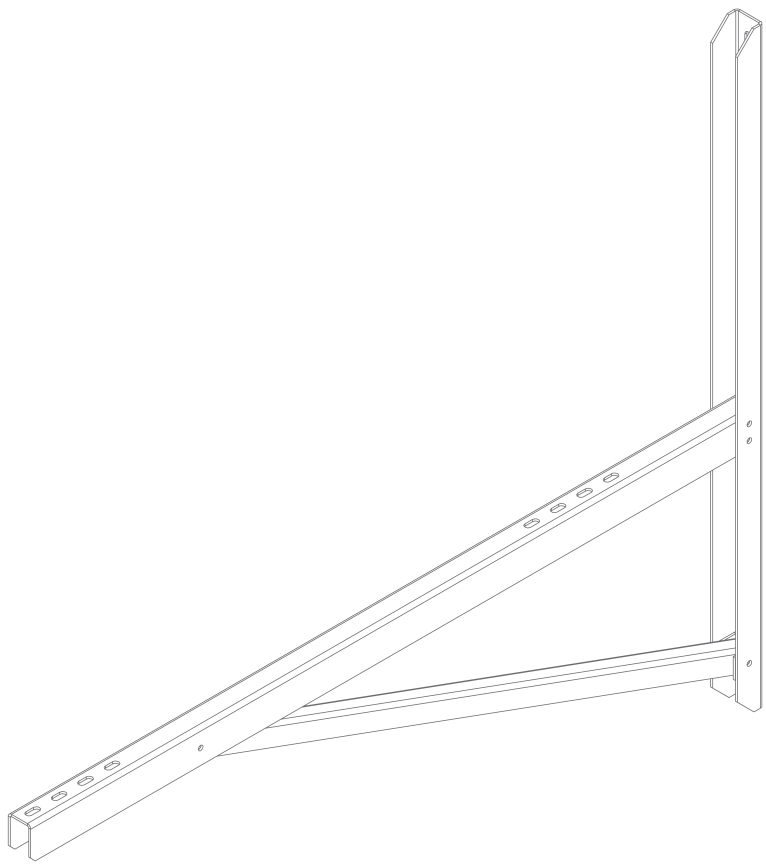

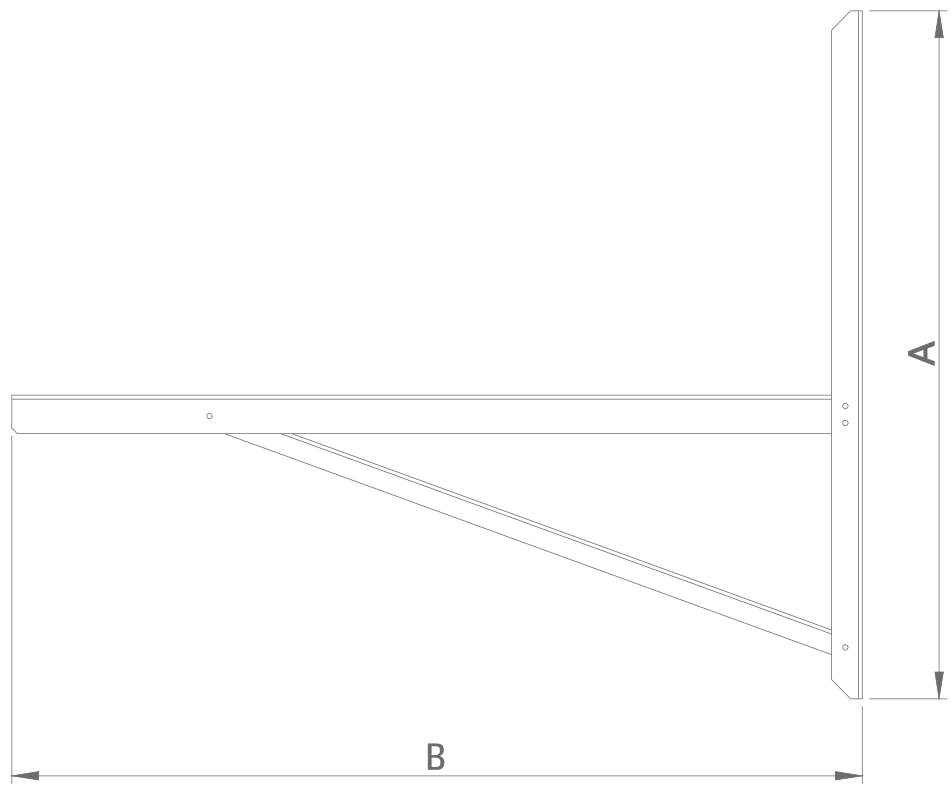

Housing group	Name	A	B	Slots
5	Wall bracket 800	800	806	ϕ9x20
5 and 6	Wall bracket 1000	874	1006	ϕ9x20
6 and 7	Wall bracket 1100	895	1106	ϕ9x20

Dimensions are expressed in millimeters

MB FRIGO

CHILLING
YOUR WORLD
SINCE 1981

Bani 81, 10010 Zagreb, Croatia
Tel: +385 1 660 8002, **Fax:** +385 1 660 9005
www.mbfrigo.com

Scan to download vCard

CERTIFIED TÜV ISO 9001:2015
CERTIFIED TÜV ISO 14001:2015
CERTIFIED TÜV ISO 45001:2018